MIL-STD-1553B
21 September 1978
SUPERSEDING
MIL-STD-1553A
30 April 1975

MILITARY STANDARD

AIRCRAFT INTERNAL TIME DIVISION COMMAND/RESPONSE MULTIPLEX DATA BUS

FSC MISC

DEPARTMENT OF DEFENSE
Washington D.C. 20360

Aircraft Internal Time Division Command/Response Multiplex Data Bus

MIL-STD-1553B

1. This Military Standard is approved for use by all Department and Agencies of the Department of Defense.

2. Beneficial comments (recommendations, additions, deletions) and any pertinent data which may be of use in improving this document should be addressed to: Aeronautical Systems Division, Attn: ENAI, Wright-Patterson Air Force Base 45433, by using the self addressed Standardization Document Improvement Proposal (DD Form 1426) appearing at the end of this document or by letter.

FOREWORD

This standard contains requirements for aircraft internal time division command/response multiplex data bus techniques which will be utilized in systems integration of aircraft subsystems. Even with the use of this standard, subtle differences will exist between multiplex data buses used on different aircraft due to particular aircraft mission requirements and the designer options allowed in this standard. The system designer must recognize this fact and design the multiplex bus controller hardware and software to accommodate such differences. These designer selected options must exist, so as to allow the necessary flexibility in the design of specific multiplex systems in order to provide for the control mechanism, architecture redundancy, degradation concept and traffic patterns peculiar to the specific aircraft mission requirements.

CONTENTS

Paragraph		Page
1.	SCOPE	1
1.1	Scope	1
1.2	Application	1
2.	REFERENCED DOCUMENTS	1
2.1	Issue of Document	1
3.	DEFINITIONS	1
3.1	Bit	1
3.2	Bit Rate	1
3.3	Pulse Code Modulation (PCM)	1
3.4	Time Division Multiplexing (TDM)	1
3.5	Half Duplex	1
3.6	Word	1
3.7	Message	3
3.8	Subsystem	3
3.9	Data Bus	3
3.10	Terminal	3
3.11	Bus Controller	3
3.12	Bus Monitor	3
3.13	Remote Terminal (RT)	3
3.14	Asynchronous Operation	3
3.15	Dynamic Bus Control	3
3.16	Command/Response	3
3.17	Redundant Data Bus	3
3.18	Broadcast	3
3.19	Mode Code	3
4.	GENERAL REQUIREMENTS	4
4.1	Test and Operating Requirements	4
4.2	Data Bus Operation	4
4.3	Characteristics	4
4.3.1	Data Form	4
4.3.2	Bit Priority	4
4.3.3	Transmission Method	4
4.3.3.1	Modulation	4
4.3.3.2	Data Code	4
4.3.3.3	Transmission Bit Rate	4
4.3.3.4	Word Size	4
4.3.3.5	Word Formats	4
4.3.3.5.1	Command Word	8
4.3.3.5.1.1	Sync	8
4.3.3.5.1.2	Remote Terminal Address	8
4.3.3.5.1.3	Transmit/Receive	8
4.3.3.5.1.4	Subaddress/Mode	8
4.3.3.5.1.5	Data word Count/Mode Code	8
4.3.3.5.1.6	Parity	8
4.3.3.5.1.7	Optional Mode Control	8
4.3.3.5.1.7.1	Dynamic Bus Control	9

CONTENTS (Cont'd)

Paragraph		Page
4.3.3.5.1.7.2	Synchronize (Without Data Word)	9
4.3.3.5.1.7.3	Transmit Status Word	9
4.3.3.5.1.7.4	Initiate Self Test	9
4.3.3.5.1.7.5	Transmitter Shutdown	9
4.3.3.5.1.7.6	Override Transmitter Shutdown	9
4.3.3.5.1.7.7	Inhibit T/F Bit	9
4.3.3.5.1.7.8	Override Inhibit T/F Bit	9
4.3.3.5.1.7.9	Reset Remote Terminal	9
4.3.3.5.1.7.10	Reserved Mode Codes (01001 to 01111)	9
4.3.3.5.1.7.11	Transmit Vector Word	11
4.3.3.5.1.7.12	Synchronize (With Data Word)	11
4.3.3.5.1.7.13	Transmit Last Command Word	11
4.3.3.5.1.7.14	Transmit Built-In-Test (BIT) Word	11
4.3.3.5.1.7.15	Selected Transmitter Shutdown	11
4.3.3.5.1.7.16	Override Selected Transmitter Shutdown	11
4.3.3.5.1.7.17	Reserved mode Codes (10110 to 11111)	11
4.3.3.5.2	Data Word	11
4.3.3.5.2.1	Sync	11
4.3.3.5.2.2	Data	12
4.3.3.5.2.3	Parity	12
4.3.3.5.3	Status Word	12
4.3.3.5.3.1	Sync	12
4.3.3.5.3.2	RT Address	12
4.3.3.5.3.3	Message Error Bit	12
4.3.3.5.3.4	Instrumentation Bit	12
4.3.3.5.3.5	Service Request Bit	12
4.3.3.5.3.6	Reserved Status Bits	12
4.3.3.5.3.7	Broadcast Command Received Bit	13
4.3.3.5.3.8	Busy Bit	13
4.3.3.5.3.9	Subsystem Flag Bit	13
4.3.3.5.3.10	Dynamic Bus Control Acceptance Bit	13
4.3.3.5.3.11	Terminal Flag Bit	13
4.3.3.5.3.12	Parity Bit	13
4.3.3.5.4	Status Word Reset	13
4.3.3.6	Message Formats	13
4.3.3.6.1	Bus controller to Remote Terminal Transfers	14
4.3.3.6.2	Remote Terminal to Bus Controller Transfers	14
4.3.3.6.3	Remote Terminal to Remote Terminal Transfers	14
4.3.3.6.4	Mode Command Without Data Word	14
4.3.3.6.5	Mode Command With Data Word (Transmit)	14
4.3.3.6.6	Mode Command With Data Word (Receive)	14
4.3.3.6.7	Optional Broadcast Command	14
4.3.3.6.7.1	Bus controller to Remote Terminal(s) Transfer (Broadcast)	14
4.3.3.6.7.2	Remote Terminal to Remote Terminal(s) Transfer (Broadcast)	17
4.3.3.6.7.3	Mode Command Without Data Word (Broadcast)	17
4.3.3.6.7.4	Mode Command With Data Word (Broadcast)	17
4.3.3.7	Intermessage Gap	17
4.3.3.8	Response Time	17

CONTENTS (Cont'd)

Paragraph		Page
4.3.3.9	Minimum No-Response Time-Out	17
4.4	Terminal Operation	17
4.4.1	Common Operation	17
4.4.1.1	Word Validation	21
4.4.1.2	Transmission Continuity	21
4.4.1.3	Terminal Fail-Safe	21
4.4.2	Bus Controller Operation	21
4.4.3	Remote Terminal	21
4.4.3.1	Operation	21
4.4.3.2	Superseding Valid Commands	21
4.4.3.3	Invalid Commands	21
4.4.3.4	Illegal Command	21
4.4.3.5	Valid Data Reception	22
4.4.3.6	Invalid Data Reception	22
4.4.4	Bus Monitor Operation	22
4.5	Hardware Characteristics	22
4.5.1	Data Bus Characteristics	22
4.5.1.1	Cable	22
4.5.1.2	Characteristics Impedance	22
4.5.1.3	Cable Attenuation	22
4.5.1.4	Cable Termination	22
4.5.1.5	Cable Stub Requirements	22
4.5.1.5.1	Transformer Coupled Stubs	23
4.5.1.5.1.1	Coupling Transformer	23
4.5.1.5.1.1.1	Transformer Input Impedance	23
4.5.1.5.1.1.2	Transformer Waveform Integrity	23
4.5.1.5.1.1.3	Transformer Common Mode Rejection	23
4.5.1.5.1.2	Fault Isolation	23
4.5.1.5.1.3	Cable Coupling	23
4.5.1.5.1.4	Stub Voltage Requirements	23
4.5.1.5.2	Direct Coupled Stubs	23
4.5.1.5.2.1	Fault Isolation	23
4.5.1.5.2.2	Cable Coupling	25
4.5.1.5.2.3	Stub Voltage Requirements	25
4.5.1.5.3	Wiring and Cabling for EMC	25
4.5.2	Terminal Characteristics	25
4.5.2.1	Terminals with Transformer Coupled Stubs	25
4.5.2.1.1	Terminal Output Characteristics	25
4.5.2.1.1.1	Output Levels	25
4.5.2.1.1.2	Output Waveform	25
4.5.2.1.1.3	Output Noise	25
4.5.2.1.1.4	Output Symmetry	25
4.5.2.1.2	Terminal Input Characteristics	25
4.5.2.1.2.1	Input Waveform Compatibility	27
4.5.2.1.2.2	Common Mode Rejection	27
4.5.2.1.2.3	Input Impedance	27
4.5.2.1.2.4	Noise Rejection	27
4.5.2.2	Terminals With Direct Coupled Stubs	27
4.5.2.2.1	Terminal Output Characteristics	27
4.5.2.2.1.1	Output Levels	27
4.5.2.2.1.2	Output Waveform	29

CONTENTS (Cont'd)

Paragraph		Page
4.5.2.2.1.3	Output Noise	29
4.5.2.2.1.4	Output Symmetry	29
4.5.2.2.2	Terminal Input Characteristics	29
4.5.2.2.2.1	Input Waveform Compatibility	29
4.5.2.2.2.2	Common Mode Rejection	29
4.5.2.2.2.3	Input Impedance	29
4.5.2.2.2.4	Noise Rejection	29
4.6	Redundant Data Bus Requirements	30
4.6.1	Electrical Isolation	30
4.6.2	Single Event Failures	30
4.6.3	Dual Standby Redundant Data Bus	30
4.6.3.1	Data Bus Activity	30
4.6.3.2	Reset Data Bus Transmitter	30
5.	DETAIL REQUIREMENTS	30

Paragraph		Page
	FIGURES	
1	Sample Multiplex Data Bus Architecture	2
2	Data Encoding	5
3	Word Formats	6
4	Command and Status Sync	7
5	Data Sync	7
6	Information Transfer Formats	15
7	Broadcast Information Transfer Formats	16
8	Intermessage Gap and Response Time	18
9	Data Bus Interface Using Trans. Coupling	19
10	Data Bus Interface Using Direct Coupling	20
11	Coupling Transformer	24
12	Terminal I/O Characteristics for Transformer Coupled and Direct Coupled Stubs	24
13	Output Waveform	26
	TABLES	
I	Assigned Mode Codes	10
II	Criteria for Acceptance or Rejection of a Terminal for the Noise Rejection Test	28
	APPENDIX	
10	General	31
10.1	Redundancy	31
10.2	Bus Controller	31
10.3	Multiplex Selection Criteria	33
10.4	High Reliability Requirements	33
10.5	Stubbing	33
10.6	Use of Broadcast Option	34
	APPENDIX FIGURES	
10.1	Illustration of Possible Redundancy	32
10.2	Illustration of Possible Redundancy	32

1. SCOPE

1.1 Scope. This standard establishes requirements for digital, command/response, time division multiplexing (Data bus) techniques on aircraft. It encompasses the data bus line and its interface electronics illustrated on figure 1, and also defines the concept of operation and information flow on the multiplex data bus and the electrical and functional formats to be employed.

1.2 Application. When invoked in a specification or statement of work, these requirements shall apply to the multiplex data bus and associated equipment which is developed either alone or as a portion of an aircraft weapon system or subsystem development. The contractor is responsible for invoking all the applicable requirements of this Military Standard on any and all subcontractors he may employ.

2. REFERENCED DOCUMENTS

2.1 Issue of document. The following document, of the issue in effect on date of invitation for bid or request for proposal, forms a part of the standard to the extent specified herein.

SPECIFICATION

MILITARY

MIL-E-6051 Electromagnetic Compatibility Requirements, Systems

(Copies of specifications, standards, drawings, and publications required by contractors in connection with specific procurement functions should be obtained from the procuring activity or as directed by the contracting officer.)

3. DEFINITIONS

3.1 Bit. Contraction of binary digit: may be either zero or one. In information theory a binary digit is equal to one binary decision or the designation of one of two possible values or states of anything used to store or convey information.

3.2 Bit rate. The number of bits transmitted per second.

3.3 Pulse code modulation (PCM). The form of modulation in which the modulation signal is sampled, quantized, and coded so that each element of information consists of different types or numbers of pulses and spaces.

3.4 Time division multiplexing (TDM). The transmission of information from several signal sources through one communication system with different signal samples staggered in time to form a composite pulse train.

3.5 Half duplex. Operation of a data transfer system in either direction over a single line, but not in both directions on that line simultaneously.

3.6 Word. In this document a word is a sequence of 16 bits plus sync and parity. There are three types of words: command, status and data.

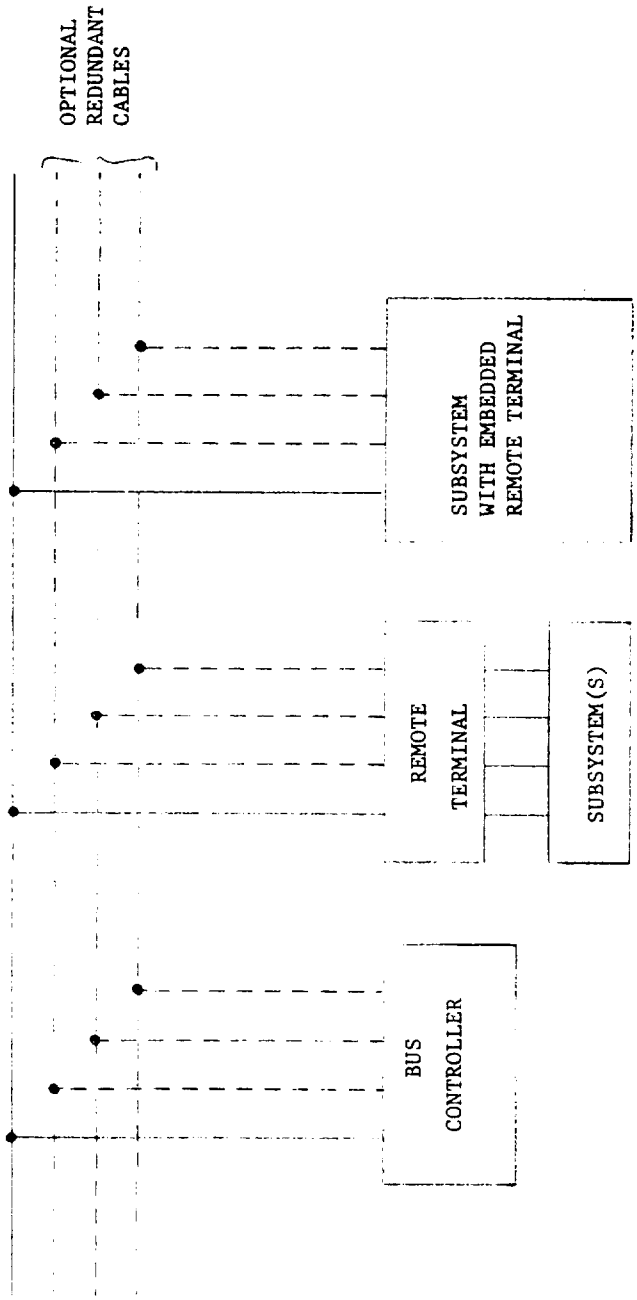

FIGURE 1. Sample multiplex data bus architecture.

3.7 Message. A single message is the transmission of a command word, status word, and data words if they are specified. For the case of a remote terminal to remote terminal (RT to RT) transmission, the message shall include the two command words, the two status words, and data words.

3.8 Subsystem. The device or functional unit receiving data transfer service from the data bus.

3.9 Data bus. Whenever a data bus or bus is referred to in this document it shall imply all the hardware including twisted shielded pair cables, isolation resistors, transformers, etc., required to provide a single data path between the bus controller and all the associated remote terminals.

3.10 Terminal. The electronic module necessary to interface the data bus with the subsystem and the subsystem with the data bus. Terminals may exist as separate line replaceable units (LRU's) or be contained within the elements of the subsystem.

3.11 Bus controller. The terminal assigned the task of initiating information transfers on the data bus.

3.12 Bus monitor. The terminal assigned the task of receiving bus traffic and extracting selected information to be used at a later time.

3.13 Remote terminal (RT). All terminals not operating as the bus controller or as a bus monitor.

3.14 Asynchronous operation. For the purpose of this standard, asynchronous operation is the use of an independent clock source in each terminal for message transmission. Decoding is achieved in receiving terminals using clock information derived from the message.

3.15 Dynamic bus control. The operation of a data bus system in which designated terminals are offered control of the data bus.

3.16 Command/Response. Operation of a data bus system such that remote terminals receive and transmit data only when commanded to do so by the bus controller.

3.17 Redundant data bus. The use of more than one data bus to provide more than one data path between the subsystems, i.e., dual redundant data bus, tri-redundant data bus, etc.

3.18 Broadcast. Operation of a data bus system such that information transmitted by the bus controller or a remote terminal is addressed to more than one of the remote terminals connected to the data bus.

3.19 Mode code. A means by which the bus controller can communicate with the multiplex bus related hardware, in order to assist in the management of information flow.

4. GENERAL REQUIREMENTS

4.1 Test and operating requirements. All requirements as specified herein shall be valid over the environmental conditions which the multiplex data bus system shall be required to operate.

4.2 Data bus operation. The multiplex data bus system in its most elemental configuration shall be as shown on figure 1. The multiplex data bus system shall function asynchronously in a command/response mode, and transmission shall occur in a half-duplex manner. Sole control of information transmission on the bus shall reside with the bus controller, which shall initiate all transmissions. The information flow on the data bus shall be comprised of messages which are, in turn, formed by three types of words (command, data, and status) as defined in 4.3.3.5.

4.3 Characteristics

4.3.1 Data form. Digital data may be transmitted in any desired form, provided that the chosen form shall be compatible with the message and word formats defined in this standard. Any unused bit positions in a word shall be transmitted as logic zeros.

4.3.2 Bit priority. The most significant bit shall be transmitted first with the less significant bits following in descending order of value in the data word. The number of bits required to define a quantity shall be consistent with the resolution or accuracy required. In the event that multiple precision quantities (information accuracy or resolution requiring more than 16 bits) are transmitted, the most significant bits shall be transmitted first, followed by the word(s) containing the lesser significant bits in numerical descending order. Bit packing of multiple quantities in a single data word is permitted.

4.3.3 Transmission method

4.3.3.1 Modulation. The signal shall be transferred over the data bus in serial digital pulse code modulation form.

4.3.3.2 Data code. The data code shall be Manchester II bi-phase level. A logic one shall be transmitted as a bipolar coded signal 1/0 (i.e., a positive pulse followed by a negative pulse). A logic zero shall be a bipolar coded signal 0/1 (i.e., a negative pulse followed by a positive pulse). A transition through zero occurs at the midpoint of each bit time (see figure 2).

4.3.3.3 Transmission bit rate. The transmission bit rate on the bus shall be 1.0 megabit per second with a combined accuracy and long-term stability of ± 0.1 percent (i.e., ± 1000 Hertz (Hz)). The short-term stability (i.e., stability over 1.0 second interval) shall be at least 0.01 percent (i.e., ± 100 Hz).

4.3.3.4 Word size. The word size shall be 16 bits plus the sync waveform and the parity bit for a total of 20 bits times as shown on figure 3.

4.3.3.5 Word formats. The word formats shall be as shown on figure 3 for the command, data, and status words.

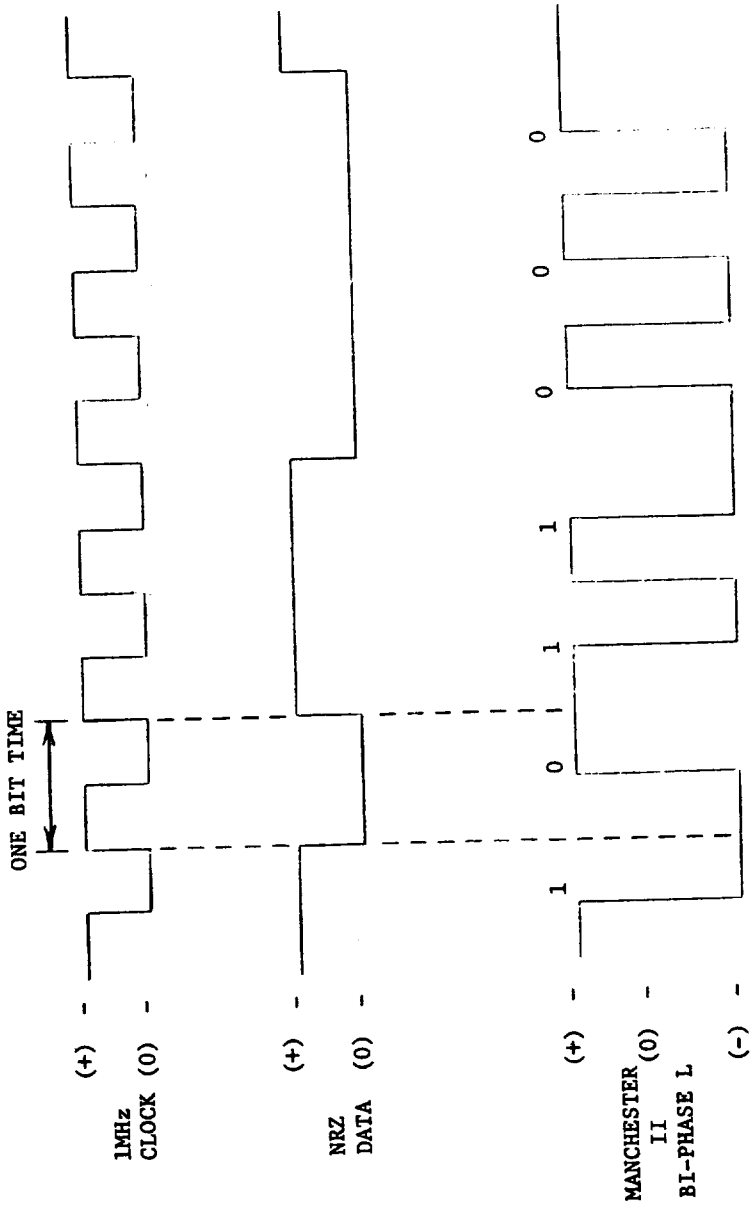

FIGURE 2. Data encoding.

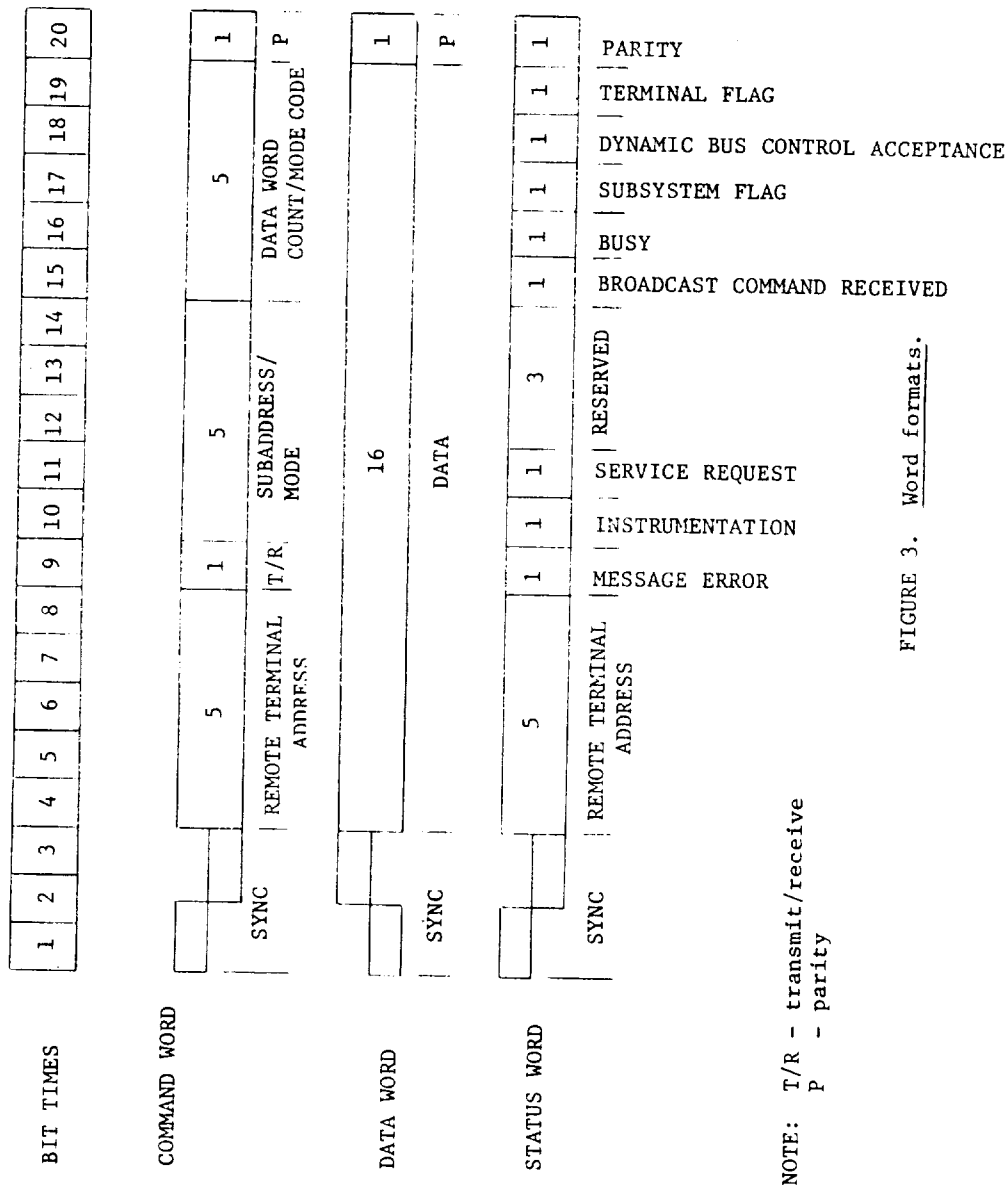

FIGURE 3. Word formats.

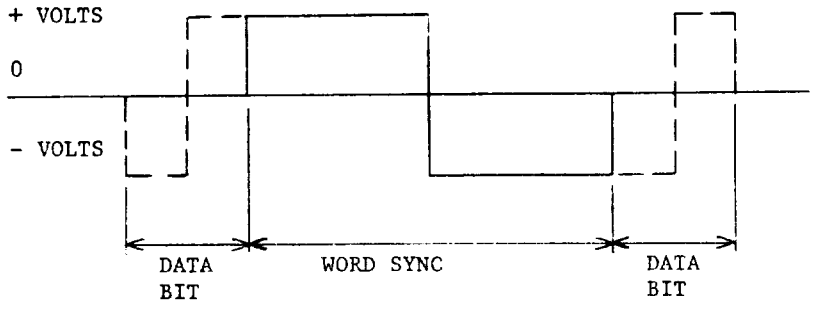

FIRURE 4. Command and status sync.

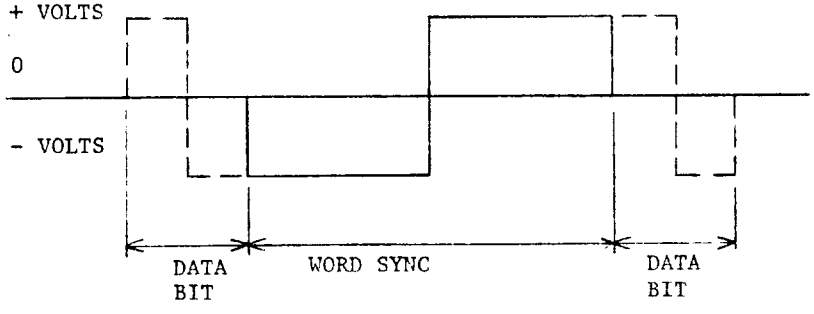

FIGURE 5. Data sync.

4.3.3.5.1 Command word. A command word shall be comprised of a sync waveform, remote terminal address field, transmit/receive (T/R) bit, subaddress/mode field, word count/mode code field, and a parity (P) bit (see figure 3).

4.3.3.5.1.1 Sync. The command sync waveform shall be an invalid Manchester waveform as shown on figure 4. The width shall be three bit times, with the sync waveform being positive for the first one and one-half bit times, and then negative for the following one and one-half bit times. If the next bit following the sync waveform is a logic zero, then the last half of the sync waveform will have an apparent width of two clock periods due to the Manchester encoding.

4.3.3.5.1.2 Remote terminal address. The next five bits following the sync shall be the RT address. Each RT shall be assigned a unique address. Decimal address 31 (11111) shall not be assigned as a unique address. In addition to its unique address, a RT shall be assigned decimal address 31 (11111) as the common address, if the broadcast option is used.

4.3.3.5.1.3 Transmit/receive. The next bit following the remote terminal address shall be the T/R bit, which shall indicate the action required of the RT. A logic zero shall indicate the RT is to receive, and a logic one shall indicate the RT is to transmit.

4.3.3.5.1.4 Subaddress/mode. The next five bits following the R/T bit shall be utilized to indicate an RT subaddress or use of mode control, as is dictated by the individual terminal requirements. The subaddress/mode values of 00000 and 11111 are reserved for special purposes, as specified in 4.3.3.5.1.7, and shall not be utilized for any other function.

4.3.3.5.1.5 Data word count/mode code. The next five bits following the subaddress/mode field shall be the quantity of data words to be either sent out or received by the RT or the optional mode code as specified in 4.3.3.5.1.7. A maximum of 32 data words may be transmitted or received in any one message block. All 1's shall indicate a decimal count of 31, and all 0's shall indicate a decimal count of 32.

4.3.3.5.1.6 Parity. The last bit in the word shall be used for parity over the preceding 16 bits. Odd parity shall be utilized.

4.3.3.5.1.7 Optional mode control. For RT's exercising this option a subaddress/mode code of 00000 or 11111 shall imply that the contents of the data word count/mode code field are to be decoded as a five bit mode command. The mode code shall only be used to communicate with the multiplex bus related hardware, and to assist in the management of information flow, and not to extract data from or feed data to a functional subsystem. Codes 00000 through 01111 shall only be used for mode codes which do not require transfer of a data word. For these codes, the T/R bit shall be set to 1. Codes 10000 through 11111 shall only be used for mode codes which require transfer of a single data word. For these mode codes, the T/R bit shall indicate the direction of data word flow as specified in 4.3.3.5.1.3. No multiple data word transfer shall be implemented with any mode code. The mode codes are reserved for the specific functions as specified in table I and shall not be used for any other purpose. If the designer chooses to implement any of these functions, the specific

codes, T/R bit assignments, and use of a data word, shall be used as indicated. The use of the broadcast command option shall only be applied to particular mode codes as specified in table I.

4.3.3.5.1.7.1 Dynamic bus control. The controller shall issue a transmit command to an RT capable of performing the bus control function. This RT shall respond with a status word as specified in 4.3.3.5.3. Control of the data bus passes from the offering bus controller to the accepting RT upon completion of the transmission of the status word by the RT. If the RT rejects control of the data bus, the offering bus controller retains control of the data bus.

4.3.3.5.1.7.2 Synchronize (without data word). This command shall cause the RT to synchronize (e.g., to reset the internal timer, to start a sequence, etc.). The RT shall transmit the status word as specified in 4.3.3.5.3.

4.3.3.5.1.7.3 Transmit status word. This command shall cause the RT to transmit the status word associated with the last valid command word preceding this command. This mode command shall not alter the state of the status word.

4.3.3.5.1.7.4 Initiate self test. This command shall be used to initiate self test within the RT. The RT shall transmit the status word as specified in 4.3.3.5.3.

4.3.3.5.1.7.5 Transmitter shutdown. This command (to only be used with dual redundant bus systems) shall cause the RT to disable the transmitter associated with the redundant bus. The RT shall not comply with a command to shut down a transmitter on the bus from which this command is received. In all cases, the RT shall respond with a status word as specified in 4.3.3.5.3 after this command.

4.3.3.5.1.7.6 Override transmitter shutdown. This command (to only be used with dual redundant bus system) shall cause the RT to enable a transmitter which was previously disabled. The RT shall not comply with a command to enable a transmitter on the bus from which this command is received. In all cases, the RT shall respond with a status word as specified in 4.3.3.5.3 after this command.

4.3.3.5.1.7.7 Inhibit terminal flag (T/F) bit. This command shall cause the RT to set the T/F bit in the status word specified in 4.3.3.5.3 to logic zero until otherwise commanded. The RT shall transmit the status word as specified in 4.3.3.5.3.

4.3.3.5.1.7.8 Override inhibit T/F bit. This command shall cause the RT to override the inhibit T/F bit specified in 4.3.3.5.1.7.7. The RT shall transmit the status word as specified in 4.3.3.5.3.

4.3.3.5.1.7.9 Reset remote terminal. This command shall be used to reset the RT to a power up initialized state. The RT shall first transmit its status word, and then reset.

4.3.3.5.1.7.10 Reserved mode codes (01001 to 01111). These mode codes are reserved for future use and shall not be used.

TABLE I. Assigned mode codes

T/R Bit	Mode Code	Function	Associated Data Word	Broadcast Command Allowed
1	00000	Dynamic Bus Control	No	No
1	00001	Synchronize	No	Yes
1	00010	Transmit Status Word	No	No
1	00011	Initiate Self Test	No	Yes
1	00100	Transmitter Shutdown	No	Yes
1	00101	Override Transmitter Shutdown	No	Yes
1	00110	Inhibit Terminal Flag Bit	No	Yes
1	00111	Override Inhibit Terminal Flag bit	No	Yes
1	01000	Reset Remote Terminal	No	Yes
1	01001	Reserved	No	TBD
	↓	↓	↓	↓
1	01111	Reserved	No	TBD
1	10000	Transmit Vector Word	Yes	No
0	10001	Synchronize	Yes	Yes
1	10010	Transmit Last Command	Yes	No
1	10011	Transmit BIT Word	Yes	No
0	10100	Selected Transmitter Shutdown	Yes	Yes
0	10101	Override Selected Transmitter Shutdown	Yes	Yes
1 or 0	10110	Reserved	Yes	TBD
	↓	↓	↓	↓
1 or 0	11111	Reserved	Yes	TBD

NOTE: To be determined (TBD)

4.3.3.5.1.7.11 Transmit vector word. This command shall cause the RT to transmit a status word as specified in 4.3.3.5.3 and a data word containing service request information.

4.3.3.5.1.7.12 Synchronize (with data word). The RT shall receive a command word followed by a data word as specified in 4.3.3.5.2. The data word shall contain synchronization information for the RT. After receiving the command and data word, the RT shall transmit the status word as specified in 4.3.3.5.3.

4.3.3.5.1.7.13 Transmit last command word. This command shall cause the RT to transmit its status word as specified in 4.3.3.5.3 followed by a single data word which contains bits 4-19 of the last command word, excluding a transmit last command word mode code received by the RT. This mode command shall not alter the state of the RT's status word.

4.3.3.5.1.7.14 Transmit built-in-test (BIT) word. This command shall cause the RT to transmit its status word as specified in 4.3.3.5.3 followed by a single data word containing the RT BIT data. This function is intended to supplement the available bits in the status word when the RT hardware is sufficiently complex to warrant its use. The data word, containing the RT BIT data, shall not be altered by the reception of a transmit last command or a transmit status word mode code. This function shall not be used to convey BIT data from the associated subsystem(s).

4.3.3.5.1.7.15 Selected transmitter shutdown. This command shall cause the RT to disable the transmitter associated with a specified redundant data bus. The command is designed for use with systems employing more than two redundant buses. The transmitter that is to be disabled shall be identified in the data word following the command word in the format as specified in 4.3.3.5.2. The RT shall not comply with a command to shut down a transmitter on the bus from which this command is received. In all cases, the RT shall respond with a status word as specified in 4.3.3.5.3.

4.3.3.5.1.7.16 Override selected transmitter shutdown. This command shall cause the RT to enable a transmitter which was previously disabled. The command is designed for use with systems employing more than two redundant buses. The transmitter that is to be enabled shall be identified in the data word following the command word in the format as specified in 4.3.3.5.2. The RT shall not comply with a command to enable a transmitter on the bus from which this command is received. In all cases, the RT shall respond with a status word as specified in 4.3.3.5.3.

4.3.3.5.1.7.17 Reserved mode codes (10110 to 11111). These mode codes are reserved for future use and shall not be used.

4.3.3.5.2 Data word. A data word shall be comprised of a sync waveform, data bits, and a parity bit (see figure 3).

4.3.3.5.2.1 Sync. The data sync waveform shall be an invalid Manchester waveform as shown on figure 5. The width shall be three bit times, with the waveform being negative for the first one and one-half bit times, and then positive for the following one and one-half bit times. Note that if the bits preceding and following the sync are logic ones, then the apparent width of the sync waveform will be increased to four bit times.

4.3.3.5.2.2 Data. The sixteen bits following the sync shall be utilized for data transmission as specified in 4.3.2.

4.3.3.5.2.3 Parity. The last bit shall be utilized for parity as specified in 4.3.3.5.1.6.

4.3.3.5.3 Status word. A status word shall be comprised of a sync waveform, RT address, message error bit, instrumentation bit, service request bit, three reserved bits, broadcast command received bit, busy bit, subsystem flag bit, dynamic bus control acceptance bit, terminal flag bit, and a parity bit. For optional broadcast operation, transmission of the status word shall be suppressed as specified in 4.3.3.6.7.

4.3.3.5.3.1 Sync. The status sync waveform shall be as specified in 4.3.3.5.1.1.

4.3.3.5.3.2 RT address. The next five bits following the sync shall contain the address of the RT which is transmitting the status word as defined in 4.3.3.5.1.2.

4.3.3.5.3.3 Message error bit. The status word bit at bit time nine (see figure 3) shall be utilized to indicate that one or more of the data words associated with the preceding receive command word from the bus controller has failed to pass the RT's validity tests as specified in 4.4.1.1. This bit shall also be set under the conditions specified in 4.4.1.2, 4.4.3.4 and 4.4.3.6. A logic one shall indicate the presence of a message error, and a logic zero shall show its absence. All RT's shall implement the message error bit.

4.3.3.5.3.4 Instrumentation bit. The status word at bit time ten (see figure 3) shall be reserved for the instrumentation bit and shall always be a logic zero. This bit is intended to be used in conjunction with a logic one in bit time ten of the command word to distinguish between a command word and a status word. The use of the instrumentation bit is optional.

4.3.3.5.3.5 Service request bit. The status word bit at bit time eleven (see figure 3) shall be reserved for the service request bit. The use of this bit is optional. This bit when used, shall indicate the need for the bus controller to take specific predefined actions relative to either the RT or associated subsystem. Multiple subsystems, interfaced to a single RT, which individually require a service request signal shall logically OR their individual signals into the single status word bit. In the event this logical OR is performed, then the designer must make provisions in a separate data word to identify the specific requesting subsystem. The service request bit is intended to be used only to trigger data transfer operations which take place on an exception rather than periodic basis. A logic one shall indicate the presence of a service request, and a logic zero its absence. If this function is not implemented, the bit shall be set to zero.

4.3.3.5.3.6 Reserved status bits. The status word bits at bit times twelve through fourteen are reserved for future use and shall not be used. These bits shall be set to a logic zero.

4.3.3.5.3.7 Broadcast command received bit. The status word at bit time fifteen shall be set to a logic one to indicate that the preceding valid command word was a broadcast command and a logic zero shall show it was not a broadcast command. If the broadcast command option is not used, this bit shall be set to a logic zero.

4.3.3.5.3.8 Busy bit. The status word bit at bit time sixteen (see figure 3) shall be reserved for the busy bit. The use of this bit is optional. This bit, when used, shall indicate that the RT or subsystem is unable to move data to or from the subsystem in compliance with the bus controller's command. A logic one shall indicate the presence of a busy condition, and a logic zero its absence. In the event the busy bit is set in response to a transmit command, then the RT shall transmit its status word only. If this function is not implemented, the bit shall be set to logic zero.

4.3.3.5.3.9 Subsystem flag bit. The status word bit at bit time seventeen (see figure 3) shall be reserved for the subsystem flag bit. The use of this bit is optional. This bit, when used, shall flag a subsystem fault condition, and alert the bus controller to potentially invalid data. Multiple subsystems, interfaced to a single RT, which individually require a subsystem flag bit signal shall logically OR their individual signals into the single status word bit. In the event this logical OR is performed, then the designer must make provisions in a separate data word to identify the specific reporting subsystem. A logic one shall indicate the presence of the flag, and a logic zero its absence. If not used, this bit shall be set to logic zero.

4.3.3.5.3.10 Dynamic bus control acceptance bit. The status word bit at bit time eighteen (see figure 3) shall be reserved for the acceptance of dynamic bus control. This bit shall be used if the RT implements the optional dynamic bus control function. This bit, when used, shall indicate acceptance or rejection of a dynamic bus control offer as specified in 4.3.3.5.1.7.1. A logic one shall indicate acceptance of control, and a logic zero shall indicate rejection of control. If this function is not used, this bit shall be set to logic zero.

4.3.3.5.3.11 Terminal flag bit. The status word bit at bit time nineteen (see figure 3) shall be reserved for the terminal flag function. The use of this bit is optional. This bit, when used, shall flag a RT fault condition. A logic one shall indicate the presence of the flag, and a logic zero, its absence. If not used, this bit shall be set to logic zero.

4.3.3.5.3.12 Parity bit. The least significant bit in the status word shall be utilized for parity as specified in 4.3.3.5.1.6.

4.3.3.5.4 Status word reset. The status word bit, with the exception of the address, shall be set to logic zero after a valid command word is received by the RT with the exception as specified in 4.3.3.5.1.7. If the conditions which caused bits in the status word to be set (e.g., terminal flag) continue after the bits are reset to logic zero, then the affected status word bit shall be again set, and then transmitted on the bus as required.

4.3.3.6 Message formats. The messages transmitted on the data bus shall be in accordance with the formats on figure 6 and figure 7. The maximum and minimum response times shall be as stated in 4.3.3.7 and 4.3.3.8. No message formats, other than those defined herein, shall be used on the bus.

4.3.3.6.1 Bus controller to remote terminal transfers. The bus controller shall issue a receive command followed by the specified number of data words. The RT shall, after message validation, transmit a status word back to the controller. The command and data words shall be transmitted in a contiguous fashion with no interword gaps.

4.3.3.6.2 Remote terminal to bus controller transfers. The bus controller shall issue a transmit command to the RT. The RT shall, after command word validation, transmit a status word back to the bus controller, followed by the specified number of data words. The status and data words shall be transmitted in a contiguous fashion with no interword gaps.

4.3.3.6.3 Remote terminal to remote terminal transfers. The bus controller shall issue a receive command to RT A followed contiguously by a transmit command to RT B. RT B shall, after command validation, transmit a status word followed by the specified number of data words. The status and data words shall be transmitted in a contiguous fashion with no gap. At the conclusion of the data transmission by RT B, RT A shall transmit a status word within the specified time period.

4.3.3.6.4 Mode command without data word. The bus controller shall issue a transmit command to the RT using a mode code specified in table I. The RT shall, after command word validation, transmit a status word.

4.3.3.6.5 Mode command with data word (transmit). The bus controller shall issue a transmit command to the RT using a mode code specified in table I. The RT shall, after command word validation, transmit a status word followed by one data word. The status word and data word shall be transmitted in a contiguous fashion with no gap.

4.3.3.6.6 Mode command with data word (receive). The bus controller shall issue a receive command to the RT using a mode code specified in table I, followed by one data word. The command word and data word shall be transmitted in a contiguous fashion with no gap. The RT shall, after command and data word validation, transmit a status word back to the controller.

4.3.3.6.7 Optional broadcast command. See 10.6 for additional information on the use of the broadcast command.

4.3.3.6.7.1 Bus controller to remote terminal(s) transfer (broadcast). The bus controller shall issue a receive command word with 11111 in the RT address field followed by the specified number of data words. The command word and data words shall be transmitted in a contiguous fashion with no gap. The RT(s) with the broadcast option shall after message validation, set the broadcast command received bit in the status word as specified in 4.3.3.5.3.7 and shall not transmit the status word.

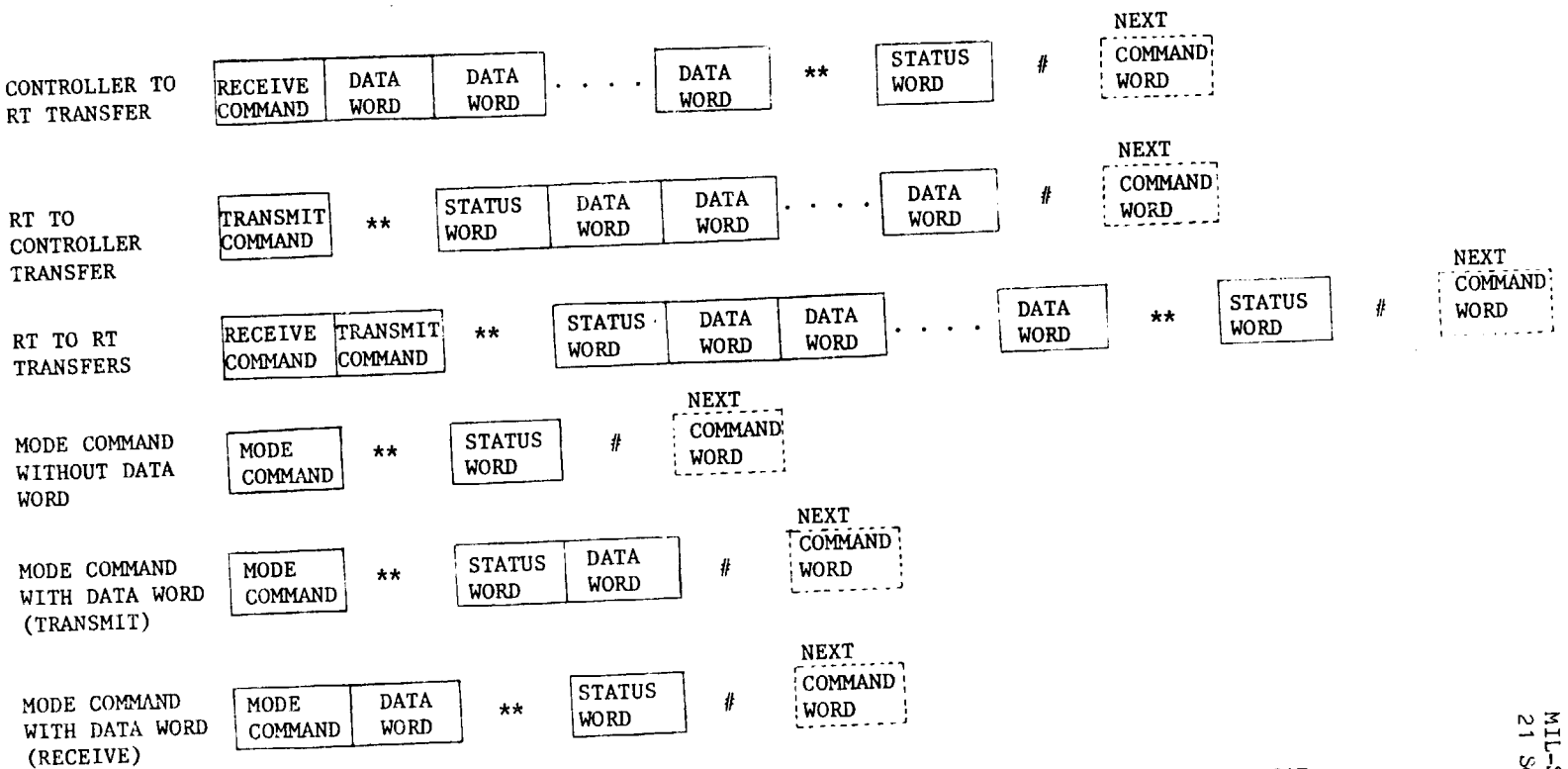

FIGURE 6. Information transfer formats.

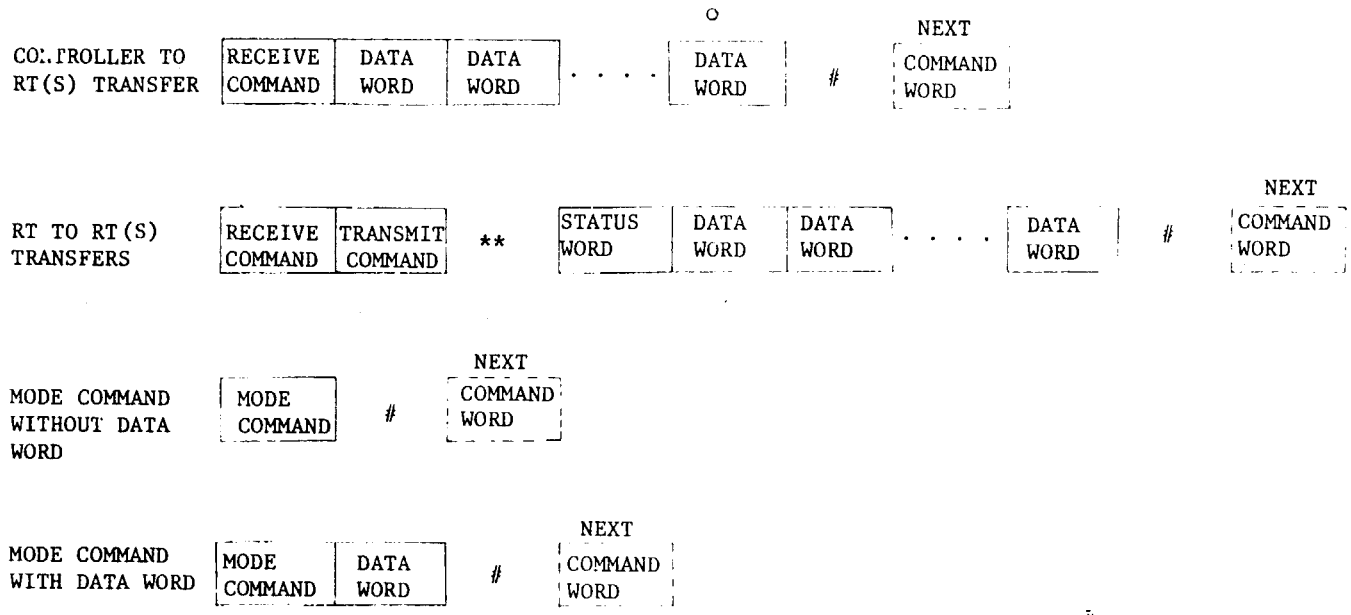

NOTE: # INTERMESSAGE GAP
** RESPONSE TIME

FIGURE 7. Broadcast information transfer formats.

4.3.3.6.7.2 Remote terminal to remote terminal(s) transfers (broadcast). The bus controller shall issue a receive command word with 11111 in the RT address field followed by a transmit command to RT A using the RT's address. RT A shall, after command word validation, transmit a status word followed by the specified number of data words. The status and data words shall be transmitted in a contiguous fashion with no gap. The RT(s) with the broadcast option, excluding RT A, shall after message validation, set the broadcast received bit in the status word as specified in 4.3.3.5.3.7 and shall not transmit the status word.

4.3.3.6.7.3 Mode command without data word (broadcast). The bus controller shall issue a transmit command word with 11111 in the RT address field, and a mode code specified in table I. The RT(s) with the broadcast option shall after command word validation, set the broadcast received bit in the status word as specified in 4.3.3.5.3.7 and shall not transmit the status word.

4.3.3.6.7.4 Mode command with data word (broadcast). The bus controller shall issue a receive command word with 11111 in the RT address field and a mode code specified in table I, followed by one data word. The command word and data word shall be transmitted in a contiguous fashion with no gap. The RT(s) with the broadcast option shall after message validation, set the broadcast received bit in the status word as specified in 4.3.3.5.3.7 and shall not transmit the status word.

4.3.3.7 Intermessage gap. The bus controller shall provide a minimum gap time of 4.0 microseconds (µs) between messages as shown on figure 6 and figure 7. This time period, shown as T on figure 8, is measured at point A of the bus controller as shown on figure 9 or figure 10. The time is measured from the mid-bit zero crossing of the last bit of the preceding message to mid-zero crossing of the next command word sync.

4.3.3.8 Response time. The RT shall respond, in accordance with 4.3.3.6, to a valid command word within the time period of 4.0 to 12.0 µs. This time period, shown as T on figure 8, is measured at point A of the RT as shown on figure 9 or figure 10. The time is measured from the mid bit zero crossing of the last word as specified in 4.3.3.6 and as shown on figure 6 and figure 7 to the mid-zero crossing of the status word sync.

4.3.3.9 Minimum no-response time-out. The minimum time that a terminal shall wait before considering that a response as specified in 4.3.3.8 has not occurred shall be 14.0 µs. The time is measured from the mid-bit zero crossing of the last bit of the last word to the mid-zero crossing of the expected status word sync at point A of the terminal as shown on figure 9 or figure 10.

4.4 Terminal operation.

4.4.1 Common operation. Terminals shall have common operating capabilities as specified in the following paragraphs.

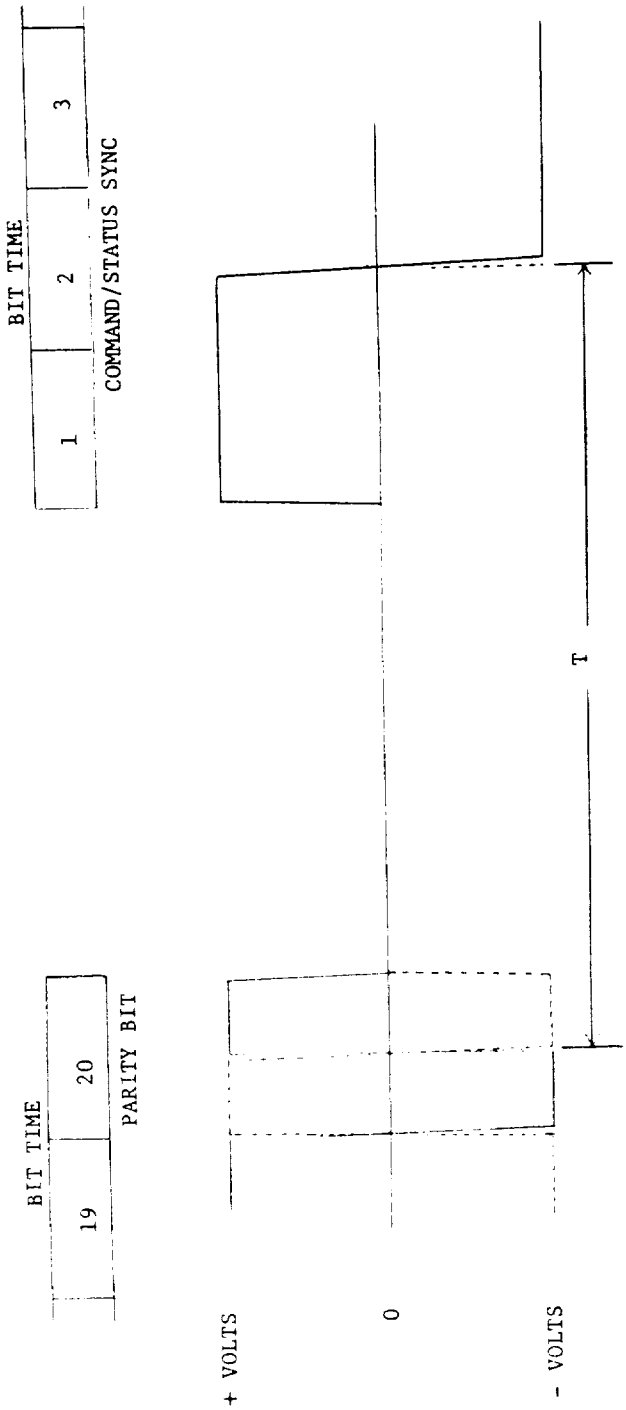

FIGURE 8. Intermessage gap and response time.

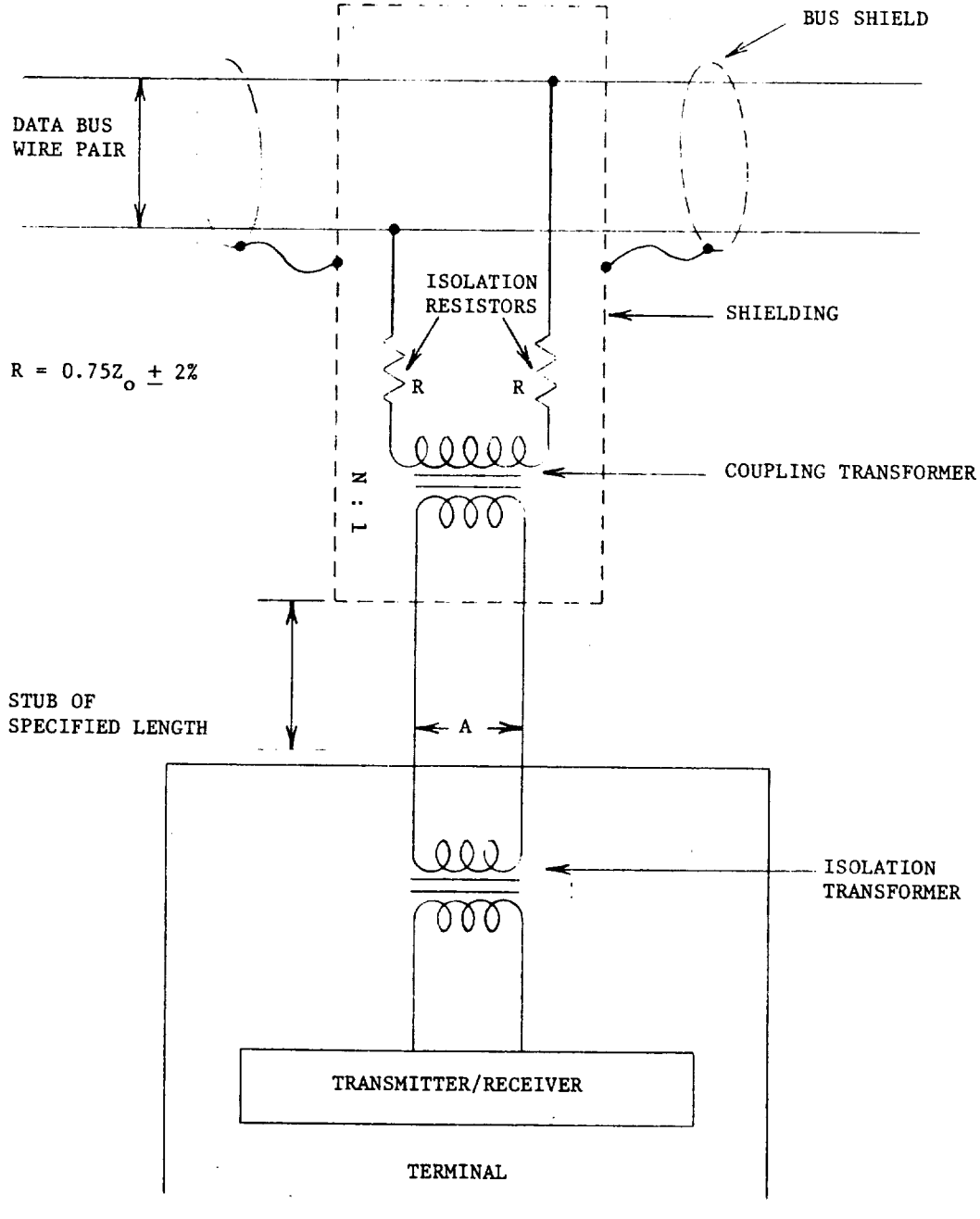

FIGURE 9. Data bus interface using transformer coupling.

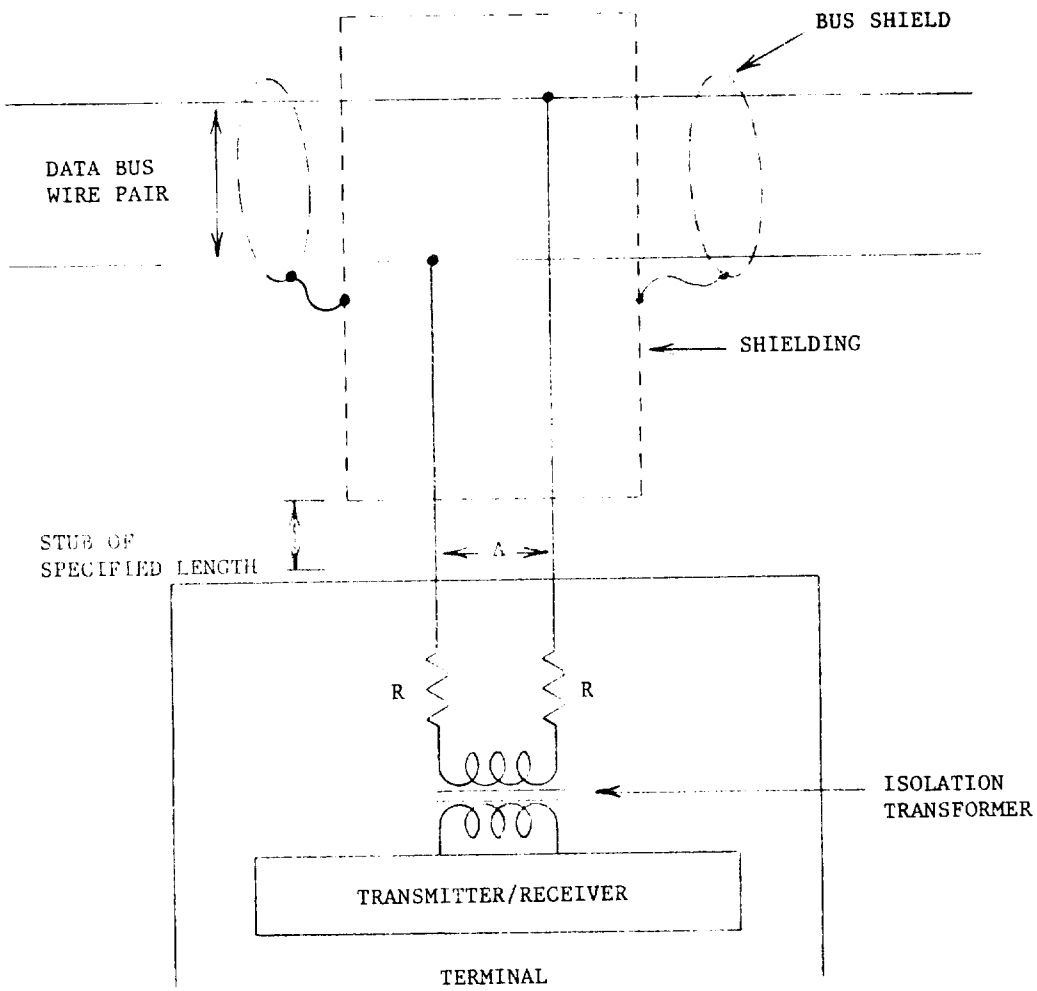

FIGURE 10. Data bus interface using direct coupling.

4.4.1.1 Word validation. The terminal shall insure that each word conforms to the following minimum criteria:

a. The word begins with a valid sync field.
b. The bits are in a valid Manchester II code.
c. The information field has 16 bits plus parity.
d. The word parity is odd.

When a word fails to conform to the preceding criteria, the word shall be considered invalid.

4.4.1.2 Transmission continuity. The terminal shall verify that the message is contiguous as defined in 4.3.3.6. Improperly timed data syncs shall be considered a message error.

4.4.1.3 Terminal fail-safe. The terminal shall contain a hardware implemented time-out to preclude a signal transmission of greater than 800.0 µs. This hardware shall not preclude a correct transmission in response to a command. Reset of this time-out function shall be performed by the reception of a valid command on the bus on which the time-out has occurred.

4.4.2 Bus controller operation. A terminal operating as a bus controller shall be responsible for sending data bus commands, participating in data transfers, receiving status responses, and monitoring system status as defined in this standard. the bus controller function may be embodied as either a stand-alone terminal, whose sole function is to control the data bus(s), or contained within a subsystem. Only one terminal shall be in active control of a data bus at any one time.

4.4.3 Remote terminal.

4.4.3.1 Operation. A remote terminal (RT) shall operate in response to valid commands received from the bus controller. The RT shall accept a command word as valid when the command word meets the criteria of 4.4.1.1, and the command word contains a terminal address which matches the RT address or an address of 11111, if the RT has the broadcast option.

4.4.3.2 Superseding valid commands. The RT shall be capable of receiving a command word on the data bus after the minimum intermessage gap time as specified in 4.3.3.7 has been exceeded, when the RT is not in the time period T as specified in 4.3.3.8 prior to the transmission of a status word, and when it is not transmitting on that data bus. A second valid command word sent to an RT shall take precedence over the previous command. The RT shall respond to the second valid command as specified in 4.3.3.8.

4.4.3.3 Invalid commands. A remote terminal shall not respond to a command word which fails to meet the criteria specified in 4.4.3.1.

4.4.3.4 Illegal command. An illegal command is a valid command as specified in 4.4.3.1, where the bits in the subaddress/mode field, data word count/mode code field, and the T/R bit indicate a mode command, subaddress, or word count that has not been implemented in the RT. It is the responsibility of the bus controller to assure that no illegal commands are sent out. The RT designer has the option of monitoring for illegal commands. If an RT that is designed with this option detects an illegal command and the proper number of contiguous

valid data words as specified by the illegal command word, it shall respond with a status word only, setting the message error bit, and not use the information received.

4.4.3.5 Valid data reception. The remote terminal shall respond with a status word when a valid command word and the proper number of contiguous valid data words are received, or a single valid word associated with a mode code is received. Each data word shall meet the criteria specified in 4.4.1.1.

4.4.3.6 Invalid data reception. Any data word(s) associated with a valid receive command that does not meet the criteria specified in 4.4.1.1 and 4.4.1.2 or an error in the data word count shall cause the remote terminal to set the message error bit in the status word to a logic one and suppress the transmission of the status word. If a message error has occurred, then the entire message shall be considered invalid.

4.4.4 Bus monitor operation. A terminal operating as a bus monitor shall receive bus traffic and extract selected information. While operating as a bus monitor, the terminal shall not respond to any message except one containing its own unique address if one is assigned. All information obtained while acting as a bus monitor shall be strictly used for off-line applications (e.g., flight test recording, maintenance recording or mission analysis) or to provide the back-up bus controller sufficient information to take over as the bus controller.

4.5 Hardware characteristics.

4.5.1 Data bus characteristics.

4.5.1.1 Cable. The cable used for the main bus and all stubs shall be a two conductor, twisted, shielded, jacketed cable. The wire-to-wire distributed capacitance shall not exceed 30.0 picofarads per foot. The cables shall be formed with not less than four twists per foot where a twist is defined as a 360 degree rotation of the wire pairs; and, the cable shield shall provide a minimum of 75.0 percent coverage.

4.5.1.2 Characteristic impedance. The nominal characteristic impedance of the cable (Z_O) shall be within the range of 70.0 ohms to 85.0 ohms at a sinusoidal frequency of 1.0 megahertz (MHz).

4.5.1.3 Cable attenuation. At the frequency of 4.5.1.2, the cable power loss shall not exceed 1.5 decibels (dB)/100 feet (ft).

4.5.1.4 Cable termination. The two ends of the cable shall be terminated with a resistance, equal to the selected cable nominal characteristic impedance (Z_O) $\pm$ 2.0 percent.

4.5.1.5 Cable stub requirements. The cable shall be coupled to the terminal as shown on figure 9 or figure 10. The use of long stubs is discouraged, and the length of a stub should be minimized. However, if installation requirements dictate, stub lengths exceeding those lengths specified in 4.5.1.5.1 and 4.5.1.5.2 are permissible.

4.5.1.5.1 Transformer coupled stubs. The length of a transformer coupled stub should not exceed 20 feet. If a transformer coupled stub is used, then the following shall apply.

4.5.1.5.1.1 Coupling transformer. A coupling transformer, as shown on figure 9, shall be required. This transformer shall have a turns ratio of 1:1.41 ± 3.0 percent, with the higher turns on the isolation resistor side of the stub.

4.5.1.5.1.1.1 Transformer input impedance. The open circuit impedance as seen at point B on figure 11 shall be greater than 3000 ohms over the frequency range of 75.0 kilohertz (kHz) to 1.0 megahertz (MHz), when measured with a 1.0 V root-mean-square (RMS) sin wave.

4.5.1.5.1.1.2 Transformer waveform integrity. The droop of the transformer using the test configuration shown on figure 11 at point B, shall not exceed 20.0 percent. Overshoot and ringing as measured at point B shall be less that ± 1.0 V peak. For this test, R shall equal 360.0 ohms ± 5.0 percent and the input A of figure 11 shall be a 250.0 kHz square wave. 27.0 V peak-to-peak, with a rise and fall time no greater than 100 nanoseconds (ns).

4.5.1.5.1.1.3 Transformer common mode rejection. The coupling transformer shall have a common mode rejection ratio greater than 45.0 dB at 1.0 MHz.

4.5.1.5.1.2 Fault isolation. An isolation resistor shall be placed in series with each connection to the data bus cable. This resistor shall have a value of 0.75 Z_o ohms plus or minus 2.0 percent, where Z_o is the selected cable nominal characteristic impedance. The impedance placed across the data bus cable shall be no less than 1.5 Z_o ohms for any failure of the coupling transformer, cable stub, or terminal transmitter/receiver.

4.5.1.5.1.3 Cable coupling. All coupling transformers and isolation resistors, as specified in 4.5.1.5.1.1 and 4.5.1.5.1.2, shall have continuous shielding which will provide a minimum of 75 percent coverage. The isolation resistors and coupling transformers shall be placed at minimum possible distance from the junction of the stub to the main bus.

4.5.1.5.1.4 Stub voltage requirements. Every data bus shall be designed such that all stubs at point A of figure 9 shall have a peak-to-peak amplitude, line-to-line within the range of 1.0 and 14.0 V for a transmission by any terminal on the data bus. This shall include the maximum reduction of data bus signal amplitude in the event that one of the terminals has a fault which causes it to reflect a fault impedance specified in 4.5.1.5.1.2 on the data bus. This shall also include the worse case output voltage of the terminals as specified in 4.5.2.1.1.1 and 4.5.2.2.1.1.

4.5.1.5.2 Direct coupled stubs. The length of a direct coupled stub should not exceed 1 foot. Refer to 10.5 for comments concerning direct coupled stubs. If a direct coupled stub is used, then the following shall apply.

4.5.1.5.2.1 Fault isolation. An isolation resistor shall be placed in series with each connection to the data bus cable. This resistor shall have a value of 55.0 ohms plus or minus 2.0 percent. The isolation resistors shall be placed within the RT as shown on figure 10.

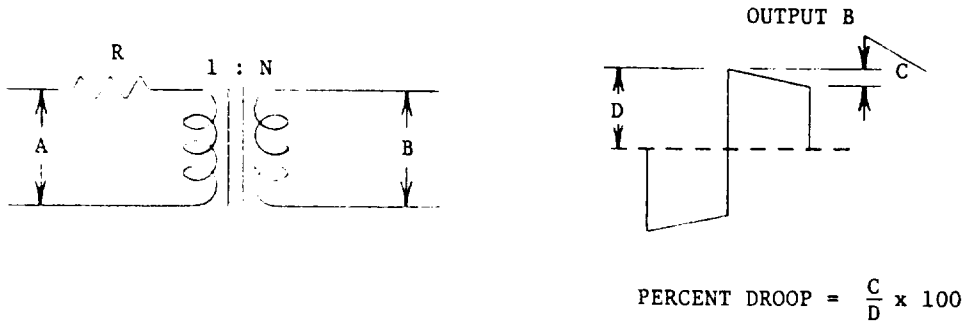

FIGURE 11. Coupling transformer.

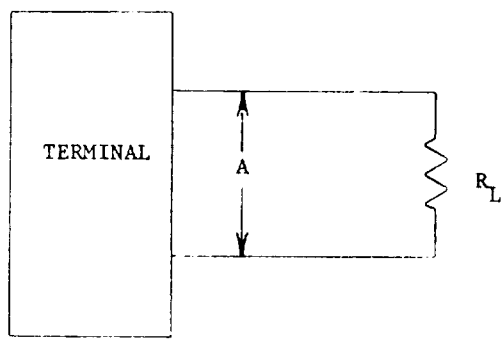

FIGURE 12. Terminal I/O characteristics for transformer coupled and direct coupled stubs.

4.5.1.5.2.2 Cable coupling. All bus-stub junctions shall have continuous shielding which will provide a minimum of 75 percent coverage.

4.5.1.5.2.3 Stub voltage requirements. Every data bus shall be designed such that all stubs at point A of figure 10 shall have a peak-to-peak amplitude, line-to-line within the range of 1.4 and 20.0 V for a transmission by any terminal on the data bus. This shall include the maximum reduction of data bus signal amplitude in the event that one of the terminals has a fault which causes it to reflect a fault impedance of 110 ohms on the data bus. This shall also include the worst case output voltage of the terminals as specified in 4.5.2.1.1.1 and 4.5.2.2.1.1.

4.5.1.5.3 Wiring and cabling for EMC. For purposes of electromagnetic capability (EMC), the wiring and cabling provisions of MIL-E-6051 shall apply.

4.5.2 Terminal characteristics.

4.5.2.1 Terminals with transformer coupled stubs.

4.5.2.1.1 Terminal output characteristics. The following characteristics shall be measured with R_L, as shown on figure 12, equal to 70.0 ohms ± 2.0 percent.

4.5.2.1.1.1 Output levels. The terminal output voltage levels shall be measured using the test configuration shown on figure 12. The terminal output voltage shall be within the range of 18.0 to 27.0 V, peak-to-peak, line-to-line, when measured at point A on figure 12.

4.5.2.1.1.2 Output waveform. The waveform, when measured at point A on figure 12 shall have zero crossing deviations which are equal to, or less than, 25.0 ns from the ideal crossing point, measured with respect to the previous zero crossing (i.e., .5 ± .025 µs, 1.0 ± .025 µs, 1.5 ± .025 µs, and 2.0 ± .025 µs). The rise and fall time of this waveform shall be from 100.0 to 300.0 ns when measured from levels of 10 to 90 percent of full waveform peak-to-peak, line-to-line, voltage as shown on figure 13. Any distortion of the waveform including overshoot and ringing shall not exceed ± 900.0 millivolts (mV) peak, line-to-line, as measured at point A, figure 12.

4.5.2.1.1.3 Output noise. Any noise transmitted when the terminal is receiving or has power removed, shall not exceed a value of 14.0 mV, RMS, line-to-line, as measured at point A, figure 12.

4.5.2.1.1.4 Output symmetry. From the time beginning 2.5 µs after the mid-bit crossing of the parity bit of the last word transmitted by a terminal, the maximum voltage at point A of figure 12 shall be no greater than ± 250.0 mV peak, line-to-line. This shall be tested with the terminal transmitting the maximum number of words it is designed to transmit, up to 33. This test shall be run six times with each word in a contiguous block of words having the same bit pattern. The six word contents that shall be used are 8000_{16}, $7FFF_{16}$, 0000_{16}, $FFFF_{16}$, 5555_{16}, and $AAAA_{16}$. The output of the terminal shall be as specified in 4.5.2.1.1.1 and 4.5.2.1.1.2.

4.5.2.1.2 Terminal input characteristics. The following characteristics shall be measured independently.

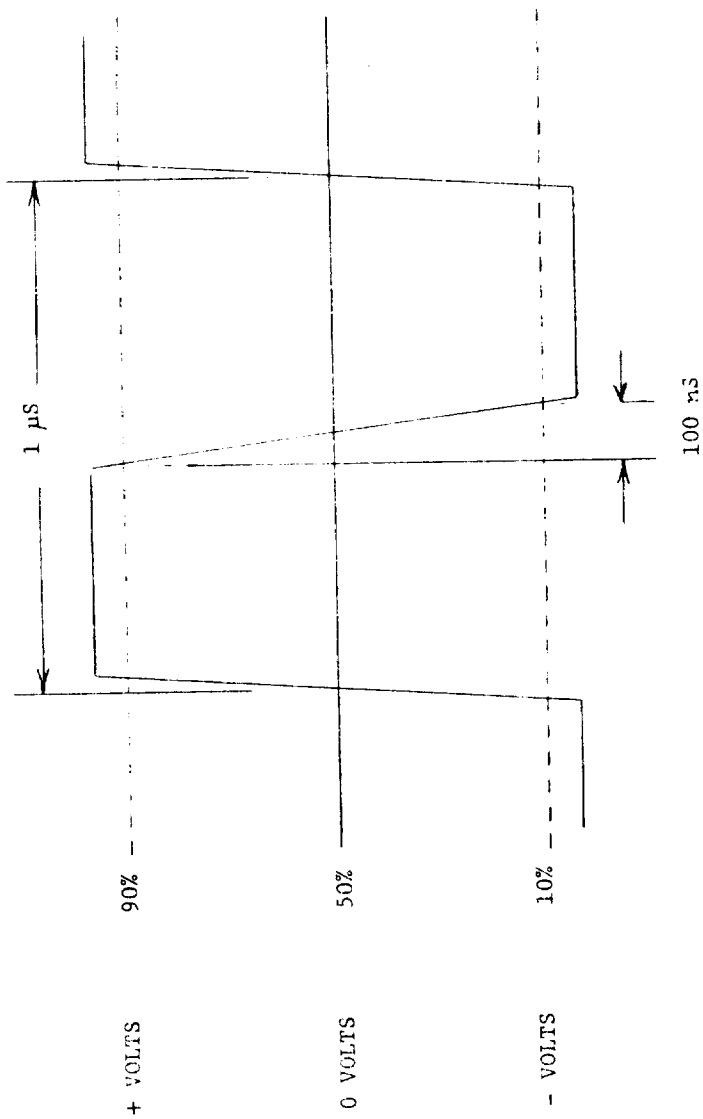

FIGURE 13. Output waveform.

4.5.2.1.2.1 Input waveform compatibility. The terminal shall be capable of receiving and operating with the incoming signals specified herein, and shall accept waveform varying from a square wave to a sine wave with a maximum zero crossing deviation from the ideal with respect to the previous zero crossing of ± 150 ns, (i.e., 2.0 ± .15 µs, 1.5 ± .15 µs, 1.0 ± .15 µs, .5 ± .15 µs). The terminal shall respond to an input signal whose peak-to-peak amplitude, line-to-line, is within the range of .86 to 14.0 V. The terminal shall not respond to an input signal whose peak-to-peak amplitude, line-to-line, is within the range of 0.0 to .20 V. The voltages are measured at point A on figure 9.

4.5.2.1.2.2 Common mode rejections. Any signals from direct current (DC) to 2.0 MHz, with amplitudes equal to or less than ± 10.0 V peak, line-to-ground, measured at point A on figure 9, shall not degrade the performance of the receiver.

4.5.2.1.2.3 Input impedance. The magnitude of the terminal input impedance, when the RT is not transmitting, or has power removed, shall be a minimum of 1000.0 ohms within the frequency range of 75.0 kHz to 1.0 MHz. This impedance is that measured line-to-line at point A on figure 9.

4.5.2.1.2.4 Noise rejection. The terminal shall exhibit a maximum word error rate of one part in 10^7, on all words received by the terminal, after validation checks as specified in 4.4, when operating in the presence of additive white Gaussian noise distributed over a bandwidth of 1.0 kHz to 4.0 MHz at an RMS amplitude of 140 mV. A word error shall include any fault which causes the message error bit to be set in the terminal's status word, or one which causes a terminal to not respond to a valid command. The word error rate shall be measured with a 2.1 V peak-to-peak, line-to-line, input to the terminal as measured at point A on figure 9. The noise tests shall be run continuously until, for a particular number of failures, the number of words received by the terminal, including both command and data words, exceeds the required number for acceptance of the terminal, or is less than the required number for rejection of the terminal, as specified in table II. All data words used in the tests shall contain random bit patterns. These bit patterns shall be unique for each data word in a message, and shall change randomly from message to message.

4.5.2.2 Terminals with direct coupled stubs.

4.5.2.2.1 Terminal output characteristics. The following characteristics shall be measured with R_L, as shown on figure 12, equal to 35.0 ohms ± 2.0 percent.

4.5.2.2.1.1 Output levels. The terminal output voltage levels shall be measured using the test configuration shown on figure 12. The terminal output voltage shall be within the range of 6.0 to 9.0 V, peak-to-peak, line-to-line, when measured at point A on figure 12.

Table II. Criteria for acceptance or rejection of a terminal for the noise rejection test

TOTAL WORDS RECEIVED BY THE TERMINAL
(in multiples of 10^7)

No. of Errors	Reject (Equal or less)	Accept (Equal or more)
0	N/A	4.40
1	N/A	5.21
2	N/A	6.02
3	N/A	6.83
4	N/A	7.64
5	N/A	8.45
6	.45	9.27
7	1.26	10.08
8	2.07	10.89
9	2.88	11.70
10	3.69	12.51
11	4.50	13.32
12	5.31	14.13
13	6.12	14.94
14	6.93	15.75
15	7.74	16.56
16	8.55	17.37
17	9.37	18.19
18	10.18	19.00
19	10.99	19.81
20	11.80	20.62
21	12.61	21.43
22	13.42	22.24
23	14.23	23.05
24	15.04	23.86
25	15.85	24.67
26	16.66	25.48
27	17.47	26.29
28	18.29	27.11
29	19.10	27.92
30	19.90	28.73
31	20.72	29.54
32	21.53	30.35
33	22.34	31.16
34	23.15	31.97
35	23.96	32.78
36	24.77	33.00
37	25.58	33.00
38	26.39	33.00
39	27.21	33.00
40	28.02	33.00
41	33.00	N/A

4.5.2.2.1.2 Output waveform. The waveform, when measured at point A on figure 12, shall have zero crossing deviations which are equal to, or less than, 25.0 ns from the ideal crossing point, measured with respect to the previous zero crossing (i.e., .5 ± .025 µs, 1.0 ± .025 µs, 1.5 ± .025 µs and 2.0 ± .025 µs). The rise and fall time of this waveform shall be from 100.0 to 300.0 ns when measured from levels of 10 to 90 percent of full waveform peak-to-peak, line-to-line, voltage as shown on figure 13. Any distortion of the waveform including overshoot and ringing shall not exceed ± 300.0 mV peak, line-to-line, as measured at point A on figure 12.

4.5.2.2.1.3 Output noise. Any noise transmitted when the terminal is receiving or has power removed, shall not exceed a value of 5.0 mV, RMS, line-to-line, as measured at point A on figure 12.

4.5.2.2.1.4 Output symmetry. From the time beginning 2.5 µs after the mid-bit crossing of the parity bit of the last word transmitted by a terminal, the maximum voltage at point A on figure 12, shall be no greater than ± 90.0 mV peak, line-to-line. This shall be tested with the terminal transmitting the maximum number of words it is designed to transmit, up to 33. This test shall be run six times with each word in a contiguous block of words having the same bit pattern. The six word contents that shall be used are 8000_{16}, $7FFF_{16}$, 0000_{16}, $FFFF_{16}$, 5555_{16}, and $AAAA_{16}$. The output of the terminal shall be as specified in 4.5.2.2.1.1 and 4.5.2.2.1.2.

4.5.2.2.2 Terminal input characteristics. The following characteristics shall be measured independently.

4.5.2.2.2.1 Input waveform compatibility. The terminal shall be capable of receiving and operating with the incoming signals specified herein, and shall accept waveform varying from a square wave to a sine wave with a maximum zero crossing deviation from the ideal with respect to the previous zero crossing of plus or minus 150 ns, (i.e., 2.0 ± .15 µs 1.5 ± .15 µs 1.0 ± .15 µs .5 ± .15 µs). The terminal shall respond to an input signal whose peak-to-peak amplitude, line-to-line, is within the range of 1.2 to 20.0 V. The terminal shall not respond to an input signal whose peak-to-peak amplitude, line-to-line, is within the range of 0.0 to .28 V. The voltages are measured at point A on figure 10.

4.5.2.2.2.2 Common mode rejections. Any signals from DC to 2.0 MHz, with amplitudes equal to or less than ± 10.0 V peak, line-to-ground, measured at point A on figure 10, shall not degrade the performance of the receiver.

4.5.2.2.2.3 Input impedance. The magnitude of the terminal input impedance, when the RT is not transmitting, or has power removed, shall be a minimum of 2000.0 ohms within the frequency range of 75.0 kHz to 1.0 MHz. This impedance is that measured line-to-line at point A on figure 10.

4.5.2.2.2.4 Noise rejection. The terminal shall exhibit a maximum word error rate of one part in 10^7, on all words received by the terminal, after validation checks as specified in 4.4, when operating in the presence of additive white Gaussian noise distributed over a bandwidth of 1.0 kHz to 4.0 MHz at an RMS amplitude of 200 mV. A word error shall include any fault which causes the message error bit to be set in the terminal's status word, or one which causes a terminal to not respond to a valid command. The word error rate shall be measured with a 3.0 V peak-to-peak, line-to-line, input to the

terminal as measured at point A on figure 10. The noise tests shall be run continuously until, for a particular number of failures, the number of words received by the terminal, including both command and data words, exceeds the required number for acceptance of the terminal, or is less than the required number for rejection of the terminal, as specified in table II. All data words used in the tests shall contain random bit patterns. These bit patterns shall be unique for each data word in a message, and shall change randomly from message to message.

4.6 Redundant data bus requirements. If redundant data buses are used, the requirements as specified in the following shall apply to those data buses.

4.6.1 Electrical isolation. All terminals shall have a minimum of 45 dB isolation between data buses. Isolation here means the ratio in db between the output voltage on the active data bus and the output voltage on the inactive data bus. This shall be measured using the test configuration specified in 4.5.2.1.1 or 4.5.2.2.1 for each data bus. Each data bus shall be alternately activated with all measurements being taken at point A on figure 12 for each data bus.

4.6.2 Single event failures. All data buses shall be routed to minimize the possibility that a single event failure to a data bus shall cause the loss of more than that particular data bus.

4.6.3 Dual standby redundant data bus. If a dual redundant data bus is used, then it shall be a dual standby redundant data bus as specified in the following paragraphs.

4.6.3.1 Data bus activity. Only one data bus can be active at any given time except as specified in 4.6.3.2.

4.6.3.2 Reset data bus transmitter. If while operating on a command, a terminal receives another valid command, from either data bus, it shall reset and respond to the new command on the data bus on which the new command is received. The terminal shall respond to the new command as specified in 4.3.3.8.

5. DETAIL REQUIREMENTS (Not Applicable)

Custodians:
Army - EL
Navy - AS
Air Force - 11

Preparing Activity:
Air Force - 11

Project MISC-0D03

APPENDIX

10. General. The following paragraphs in this appendix are presented in order to discuss certain aspects of the standard in a general sense. They are intended to provide a user of the standard more insight into the aspects discussed.

10.1 Redundancy. It is intended that this standard be used to support rather than to supplant the system design process. However, it has been found, through application experience in various aircraft, that the use of a dual standby redundancy technique is very desirable for use in integrating mission avionics. For this reason, this redundancy scheme is defined in 4.6 of this standard. None the less, the system designer should utilize this standard as the needs of a particular application dictate. The use of redundancy, the degree to which it is implemented, and the form which it takes must be determined on an individual application basis. Figures 10.1 and 10.2 illustrate some possible approaches to dual redundancy. These illustrations are not intended to be inclusive, but rather representative. It should be noted that analogous approaches exist for the triple and quad redundant cases.

10.2 Bus controller. The bus controller is a key part of the data bus system. The functions of the bus controller, in addition to the issuance of commands, must include the constant monitoring of the data bus and the traffic on the bus. It is envisioned that most of the routine minute details of bus monitoring (e.g., parity checking, terminal non-response time-out, etc.) will be embodied in hardware, while the algorithms for bus control and decision making will reside in software. It is also envisioned that, in general, the bus controller will be a general purpose airborne computer with a special input/output (I/O) to interface with the data bus. It is of extreme importance in bus controller design that the bus controller be readily able to accommodate terminals of differing protocol's and status word bits used. Equipment designed to MIL-STD-1553A will be in use for a considerable period of time; thus, bus controllers must be capable of adjusting to their differing needs. It is also important to remember that the bus controller will be the focal point for modification and growth within the multiplex system, and thus the software must be written in such a manner as to permit modification with relative ease.

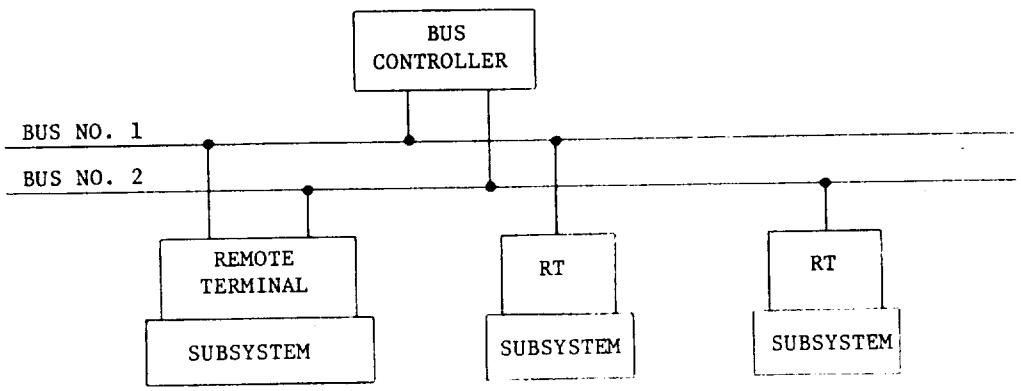

FIGURE 10.1. Illustration of possible redundancy.

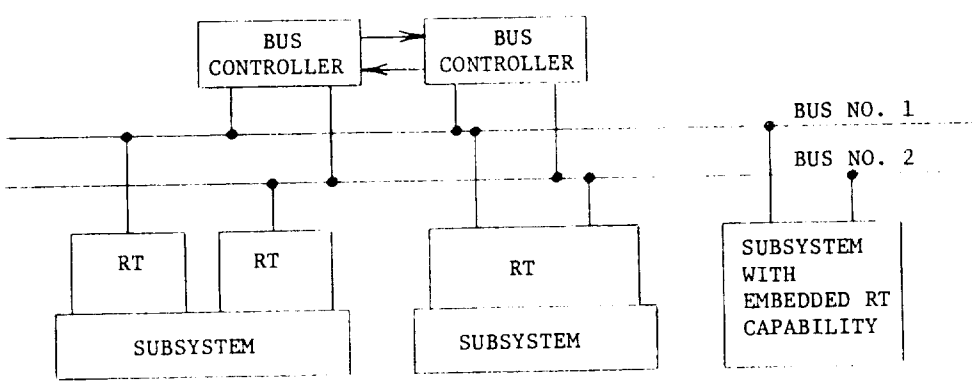

Figure 10.2

NOTE: RT - Remote Terminal

FIGURE 10.2. Illustration of possible redundancy.

10.3 Multiplex selection criteria. The selection of candidate signals for multiplexing is a function of the particular application involved, and criteria will in general vary from system to system. Obviously, those signals which have bandwidths of 400 Hz or less are prime candidates for inclusion on the bus. It is also obvious that video, audio, and high speed parallel digital signals should be excluded. The area of questionable application is usually between 400 Hz and 3KHz bandwidth. The transfer of these signals on the data bus will depend heavily upon the loading of the bus in a particular application. The decision must be based on projected future bus needs as well as the current loading. Another class of signals which in general are not suitable for multiplexing are those which can be typified by a low rate (over a mission) but possessing a high priority or urgency. Examples of such signals might be a nuclear event detector output or a missile launch alarm from a warning receiver. Such signals are usually better left hardwired, but they may be accommodated by the multiplex system if a direct connection to the bus controller's interrupt hardware is used to trigger a software action in response to the signal.

10.4 High reliability requirements. The use of simple parity for error detection within the multiplex bus system was dictated by a compromise between the need for reliable data transmission, system overhead, and remote terminal simplicity. Theoretical and empirical evidence indicates that an undetected bit error rate of 10^{-12} can be expected from a practical multiplex system built to this standard. If a particular signal requires a bit error rate which is better than that provided by the parity checking, then it is incumbent upon the system designer to provide the reliability within the constraints of the standard or to not include this signal within the multiplex bus system. A possible approach in this case would be to have the signal source and sink provide appropriate error detection and correction encoding/decoding and employ extra data words to transfer the information. Another approach would be to partition the message, transmit a portion at a time, and then verify (by interrogation) the proper transfer of each segment.

10.5 Stubbing. Stubbing is the method wherein a separate line is connected between the primary data bus line and a terminal. The direct connection of a stub line causes a mismatch which appears on the waveforms. This mismatch can be reduced by filtering at the receiver and by using bi-phase modulation. Stubs are often employed not only as a convenience in bus layout but as a means of coupling a unit to the line in such a manner that a fault on the stub or terminal will not greatly affect the transmission line operation. In this case, a network is employed in the stub line to provide isolation from the fault. These networks are also used for stubs that are of such length that the mismatch and reflection degrades bus operation. The preferred method of stubbing is to use transformer coupled stubs, as defined in 4.5.1.5.1. This method provides the benefits of DC isolation, increased common mode protection, a doubling of effective stub impedance, and fault isolation for the entire stub and terminal. Direct coupled stubs, as defined in 4.5.1.5.2 of this standard, should be avoided if at all possible. Direct coupled stubs provide no DC isolation or common mode rejection for the terminal external to its subsystem. Further, any shorting fault between the subsystems internal isolation resistors (usually on a circuit board) and the main bus junction will cause failure of that entire bus. It can be expected that when the direct coupled stub length exceeds 1.6 feet, that it will begin to distort the main bus waveforms. Note that this length includes the cable runs internal to a given subsystem.

10.6 Use of broadcast option. The use of a broadcast message as defined in 4.3.3.6.7 of this standard represents a significant departure from the basic philosophy of this standard in that it is a message format which does not provide positive closed-loop control of bus traffic. The system designer is strongly encouraged to solve any design problems through the use of the three basic message formats without resorting to use of the broadcast. If system designers do choose to use the broadcast command, they should carefully consider the potential effects of a missed broadcast message, and the subsequent implications for fault or error recovery design in the remote terminals and bus controllers.

INSTRUCTIONS: In a continuing effort to make our standardization documents better, the DoD provides this form for use in submitting comments and suggestions for improvements. All users of military standardization documents are invited to provide suggestions. This form may be detached, folded along the lines indicated, taped along the loose edge *(DO NOT STAPLE)*, and mailed. In block 5, be as specific as possible about particular problem areas such as wording which required interpretation, was too rigid, restrictive, loose, ambiguous, or was incompatible, and give proposed wording changes which would alleviate the problems. Enter in block 6 any remarks not related to a specific paragraph of the document. If block 7 is filled out, an acknowledgement will be mailed to you within 30 days to let you know that your comments were received and are being considered.

NOTE: This form may not be used to request copies of documents, nor to request waivers, deviations, or clarification of specification requirements on current contracts. Comments submitted on this form do not constitute or imply authorization to waive any portion of the referenced document*(s)* or to amend contractual requirements.

(Fold along this line)

(Fold along this line)

DEPARTMENT OF THE AIR FORCE

NO POSTAGE NECESSARY IF MAILED IN THE UNITED STATES

OFFICIAL BUSINESS
PENALTY FOR PRIVATE USE $300

BUSINESS REPLY MAIL
FIRST CLASS PERMIT NO. 73236 WASHINGTON D. C.

POSTAGE WILL BE PAID BY THE DEPARTMENT OF THE AIR FORCE

ASD/ENESS
Wright-Patterson AFB, OH 45433

STANDARDIZATION DOCUMENT IMPROVEMENT PROPOSAL

(See Instructions – Reverse Side)

1. DOCUMENT NUMBER

2. DOCUMENT TITLE

3a. NAME OF SUBMITTING ORGANIZATION

4. TYPE OF ORGANIZATION *(Mark one)*

- ☐ VENDOR
- ☐ USER
- ☐ MANUFACTURER
- ☐ OTHER *(Specify)*: _____

b. ADDRESS *(Street, City, State, ZIP Code)*

5. PROBLEM AREAS

a. Paragraph Number and Wording:

b. Recommended Wording:

c. Reason/Rationale for Recommendation:

6. REMARKS

7a. NAME OF SUBMITTER *(Last, First, MI)* – Optional

b. WORK TELEPHONE NUMBER *(Include Area Code)* – Optional

c. MAILING ADDRESS *(Street, City, State, ZIP Code)* – Optional

8. DATE OF SUBMISSION *(YYMMDD)*

(TO DETACH THIS FORM, CUT ALONG THIS LINE.)

DD FORM 82 MAR **1426**

PREVIOUS EDITION IS OBSOLETE.

MILITARY STANDARD

AIRCRAFT INTERNAL TIME DIVISION
COMMAND/RESPONSE MULTIPLEX DATA BUS

TO ALL HOLDERS OF MIL-STD-1553B.

1. THE FOLLOWING PAGES OF MIL-STD-1553B HAVE BEEN REVISED AND SUPERSEDE THE PAGES LISTED:

NEW PAGE	SUPERSEDED PAGE	DATE
iii	iii	21 September 1978
viii	viii	21 September 1978
34	34	21 September 1978

2. THE FOLLOWING NEW PAGES ARE TO BE INSERTED AS LISTED:

NEW PAGE
viiia
35

3. RETAIN THIS NOTICE PAGE AND INSERT BEFORE THE TABLE OF CONTENTS.

4. Holders of MIL-STD-1553B will verify that page changes indicated above have been entered. The notice page will be retained as a check sheet. This issuance, together with appended pages, is a separate publication. Each notice is to be retained by stocking points until the Military Standard is completely revised or cancelled.

5. This notice is applicable to all U.S. Air Force aircraft internal avionics activities.

Custodian:
Air Force - 11

Preparing activity:
Air Force - 11

Project MISC-FD32

FOREWORD

This standard contains requirements for aircraft internal time division command/response multiplex data bus techniques which will be utilized in systems integration of aircraft subsystems. Even with the use of this standard, subtle differences will exist between multiplex data buses used on different aircraft due to particular aircraft mission requirements and the designer options allowed in this standard. The system designer must recognize this fact, and design the multiplex bus controller hardware and software to accommodate such differences. These designer selected options must exist, so as to allow the necessary flexibility in the design of specific multiplex systems in order to provide for the control mechanism, architecture redundancy, degradation concept and traffic patterns peculiar to the specific aircraft mission requirements. * Appendix Section 20 selects those options which shall be required and further restricts certain portions of the standard for use in Air Force aircraft internal avionics applications.

Paragraph		Page
	FIGURES	
1	Sample Multiplex Data Bus Architecture	2
2	Data Encoding	5
3	Word Formats	6
4	Command and Status Sync	7
5	Data Sync	7
6	Information Transfer Formats	15
7	Broadcast Information Transfer Formats	16
8	Intermessage Gap and Response Time	18
9	Data Bus Interface Using Trans. Coupling	19
10	Data Bus Interface Using Direct Coupling	20
11	Coupling Transformer	24
12	Terminal I/O Characteristics for Transformer Coupled and Direct Coupled Stubs	24
13	Output Waveform	26
	TABLES	
I	Assigned Mode Codes	10
II	Criteria for Acceptance or Rejection of a Terminal for the Noise Rejection Test	28
	APPENDIX	
10	General	31
10.1	Redundancy	31
10.2	Bus Controller	31
10.3	Multiplex Selection Criteria	33
10.4	High Reliability Requirements	33
10.5	Stubbing	33
10.6	Use of Broadcast Option	34
20	General	34
20.1	Mode Codes	34
20.2	Broadcast Command	34
20.3	Mode Code Indicators	34
20.3.1	Bus Controllers	34
20.3.2	Remote Terminals	34
20.4	Data Bus Cable	35
20.4.1	Shielding	35
20.4.2	Characteristic Impedance	35
20.5	Cable Coupling	35
20.6	Direct Coupled Stubs	34
20.7	Redundant Data Bus Requirements	35
20.8	Design Considerations	35
20.8.1	Mode Code Indicator	35
20.8.2	Clock Stability	35
20.8.3	Response Time	35

Supersedes page viii of 21 September 1978

10.6 Use of broadcast option. The use of a broadcast message as defined in 4.3.3.6.7 of this standard represents a significant departure from the basic philosophy of this standard in that it is a message format which does not provide positive closed-loop control of bus traffic. The system designer is strongly encouraged to solve any design problems through the use of the three basic message formats without resorting to use of the broadcast. If system designers do choose to use the broadcast command, they should carefully consider the potential effects of a missed broadcast message, and the subsequent implications for fault or error recovery design in the remote terminals and bus controllers.

• 20. General. This appendix is applicable to all U.S. Air Force aircraft internal avionics activities. The intent of the appendix is to select those options which shall be required and to further restrict certain portions of the standard for use in Air Force avionics. References in parenthesis are to the paragraphs in the standard that are affected.

• 20.1 Mode codes. (4.3.3.5.1.7) The mode codes for dynamic bus control, inhibit terminal flag bit, override inhibit terminal flag bit, selected transmitter shutdown and override selected transmitter shutdown shall not be transmitted on the data bus by bus controllers in Air Force avionics applications. However, these mode codes may be implemented in remote terminals for Air Force avionics applications.

• 20.2 Broadcast command. (4.3.3.6.7) The broadcast command shall not be transmitted on the data bus by bus controllers in Air Force avionics applications. However, this message format may be implemented in remote terminals. If the broadcast message format is implemented in a remote terminal, then that terminal shall also implement the transmit status word mode code as specified in 4.3.3.5.1.7.3. Note that the remote terminal address of 11111 is still reserved for broadcast, and shall not be used for any other purpose in Air Force Avionics applications.

• 20.3 Mode code indicators.

• 20.3.1 Bus controllers. (4.4.2) In Air Force avionics applications, the bus controller shall be able to utilize both 00000 and 11111 in the subaddress/mode field as defined in 4.3.3.5.1.7. In addition, if a bus controller is required to utilize any mode code in its operation, then it shall be required to implement the capability to utilize all mode codes.

• 20.3.2 Remote terminals. (4.4.3.1) All RT's which are designed for Air Force avionics applications, and which implement mode codes, shall respond properly to a mode code command, as defined in 4.3.3.5.1.7, with 00000 in the subaddress/mode field. In addition, such RT's may also respond to 11111 in the subaddress/mode field as a designer option. See Section 20.8.1 for design considerations relating to the 11111 mode code indicator.

- 20.4 Data bus cable.

- 20.4.1 Shielding (4.5.1.1) The cable shield shall provide a minimum of 90.0 percent coverage.

- 20.4.2 Characteristic impedance. (4.5.1.2) The actual (not nominal) characteristic impedance shall be within the range of 70.0 Ohms to 85.0 Ohms at a sinusoidal frequency of 1.0 megahertz (MHz).

- 20.5 Cable coupling. (4.5.1.5.1.3) For Air Force avionics applications, the continuous shielding shall provide a minimum of 90.0 percent coverage.

- 20.6 Direct coupled stubs. (4.5.1.5.2) Direct coupled studs shall not be utilized in Air Force avionics applications.

- 20.7 Redundant data bus requirements. (4.6) Dual standby redundant data buses as defined in 4.6.3 shall be utilized. There may be more than two data buses utilized but the buses must operate in dual redundant data bus pairs. 4.6.1 and 4.6.2 shall also apply.

- 20.8 Design considerations. Avionics designed for Air Force applications may be required to interface to existing avionics systems which were designed to preceding versions of the standard (e.g., the F-16 avionics suite). In this case, downward compatibility problems between the new avionics and the existing system can be minimized through the consideration of three key items:

- 20.8.1 Mode code indicator. In some existing systems, such as the F-16, the bus controller uses 11111 to indicate a mode code command. The designer may wish to implement the capability in the new avionics to respond to 11111 mode code commands, in addition to the required capability for 00000 mode code commands.

- 20.8.2 Clock stability. Since this version of the standard relaxed the transmission bit rate stability requirements (4.3.3.3), the avionics designer may wish to return to the stability requirements of the preceding version of the standard. The previous requirements were ±0.01 percent long term and ±0.001 percent short term stability.

- 20.8.3 Response time. This version of the standard also expanded the maximum response time to 12.0 microseconds (4.3.3.8). The designer may also wish to return to the previous maximum response time of 7.0 microseconds as defined in 4.3.3.8 of this version of the standard.

MIL-STD-1553B
NOTICE 2
8 September 1986
SUPERSEDING
NOTICE 1
12 February 1980

MILITARY STANDARD

DIGITAL TIME DIVISION

COMMAND/RESPONSE MULTIPLEX DATA BUS

TO ALL HOLDERS OF MIL-STD-1553B:

1. MAKE THE FOLLOWING PEN AND INK CHANGES:

Page i

Delete title and substitute: "DIGITAL TIME DIVISION COMMAND/RESPONSE MULTIPLEX DATA BUS".

Page ii

Delete title and substitute: "Digital Time Division Command/Response Multiplex Data Bus".

Page 1

Paragraph 1.1, second line: Delete "on aircraft".
Paragraph 1.2, third line: Delete "an aircraft" and substitute "a".

Page 3

Paragraph 3.11, first line, after "Bus controller": Insert "(BC)".
Paragraph 3.12, first line, after "Bus monitor": Insert "(BM)".

Page 21

Paragraph 4.4.3.1, add: "No combination of RT address bits, T/R bit, subaddress/mode bits, and data word count/mode code bits of a command word shall result in invalid transmissions by the RT. Subsequent valid commands shall be properly responded to by the RT."

Page 30

Paragraph 4.6.3.2, first line: Delete "Reset data bus transmitter" and substitute "Superseding valid commands".
Paragraph 4.6.3.2, second line: Delete "from either data bus" and substitute "from the other data bus".

Page 31

Paragraph 10.2, eighth line: Delete "airborne".

FSC MCCR

DISTRIBUTION STATEMENT A.
Approved for public release;
distribution is unlimited

2. THE FOLLOWING PAGES OF MIL-STD-1553B HAVE BEEN REVISED AND SUPERSEDE THE PAGES LISTED:

NEW PAGE	DATE	SUPERSEDED PAGE	DATE
iii	8 September 1986	iii	12 February 1980
iv	8 September 1986	iv	21 September 1978
vii	8 September 1986	vii	21 September 1978
viii	8 September 1986	viii	12 February 1980
viiia	8 September 1986	viiia	12 February 1980
33	21 September 1978	33	Reprinted Without Change
34	8 September 1986	34	12 February 1980
35	8 September 1986	35	12 February 1980
36	8 September 1986	INITIAL PUBLICATION	
37	8 September 1986	INITIAL PUBLICATION	
38	8 September 1986	INITIAL PUBLICATION	

3. RETAIN THIS NOTICE AND INSERT BEFORE TABLE OF CONTENTS.

4. Holders of MIL-STD-1553B will verify that page changes and additions indicated above have been entered. This notice page will be retained as a check sheet. This issuance, together with appended pages, is a separate publication. Each notice is to be retained by stocking points until the military standard is completely revised or cancelled.

Custodians:
Army - ER
Navy - AS
Air Force - 11

Preparing activity:
Air Force - 11

Project No. MCCR-0008

FOREWORD

This standard contains requirements for a digital time division command/response multiplex data bus for use in systems integration. Even with the use of this standard, differences may exist between multiplex data buses in different system applications due to particular application requirements and the designer options allowed in this standard. The system designer must recognize this fact and design the multiplex bus controller hardware and software to accommodate such differences. These designer selected options must exist to allow the necessary flexibility in the design of specific multiplex systems in order to provide for the control mechanism, architectural redundancy, degradation concept and traffic patterns peculiar to the specific application requirements. Appendix, Section 30 selects those options which shall be required and further restricts certain portions of the standard for the use in all dual standby redundant applications for the Army, Navy, and Air Force.

Supersedes page iii dated 12 February 1980.

CONTENTS

Paragraph		Page
1.	SCOPE	1
1.1	Scope	1
1.2	Application	1
2.	REFERENCED DOCUMENTS	1
2.1	Issue of Document	1
3.	DEFINITIONS	1
3.1	Bit	1
3.2	Bit Rate	1
3.3	Pulse Code Modulation (PCM)	1
3.4	Time Division Multiplexing (TDM)	1
3.5	Half Duplex	1
3.6	Word	1
3.7	Message	3
3.8	Subsystem	3
3.9	Data Bus	3
3.10	Terminal	3
* 3.11	Bus Controller (BC)	3
* 3.12	Bus Monitor (BM)	3
3.13	Remote Terminal (RT)	3
3.14	Asynchronous Operation	3
3.15	Dynamic Bus Control	3
3.16	Command/Response	3
3.17	Redundant Data Bus	3
3.18	Broadcast	3
3.19	Mode Code	3
4.	GENERAL REQUIREMENTS	4
4.1	Test and Operating Requirements	4
4.2	Data Bus Operation	4
4.3	Characteristics	4
4.3.1	Data Form	4
4.3.2	Bit Priority	4
4.3.3	Transmission Method	4
4.3.3.1	Modulation	4
4.3.3.2	Data Code	4
4.3.3.3	Transmission Bit Rate	4
4.3.3.4	Word Size	4
4.3.3.5	Word Formats	4
4.3.3.5.1	Command Word	8
4.3.3.5.1.1	Sync	8
4.3.3.5.1.2	Remote Terminal Address	8
4.3.3.5.1.3	Transmit/Receive	8
4.3.3.5.1.4	Subaddress/Mode	8
4.3.3.5.1.5	Data word Count/Mode Code	8
4.3.3.5.1.6	Parity	8
4.3.3.5.1.7	Optional Mode Control	8
4.3.3.5.1.7.1	Dynamic Bus Control	9

Supersedes page iv dated 21 September 1978.

CONTENTS (Cont'd)

Paragraph		Page
4.5.2.2.1.3	Output Noise	29
4.5.2.2.1.4	Output Symmetry	29
4.5.2.2.2	Terminal Input Characteristics	29
4.5.2.2.2.1	Input Waveform Compatibility	29
4.5.2.2.2.2	Common Mode Rejection	29
4.5.2.2.2.3	Input Impedance	29
4.5.2.2.2.4	Noise Rejection	29
4.6	Redundant Data Bus Requirements	30
4.6.1	Electrical Isolation	30
4.6.2	Single Event Failures	30
4.6.3	Dual Standby Redundant Data Bus	30
4.6.3.1	Data Bus Activity	30
* 4.6.3.2	Superseding Valid Commands	30
5.	DETAIL REQUIREMENTS	30

Supersedes page vii dated 21 September 1978.

CONTENTS (Cont'd)

		Page
	FIGURES	
1.	Sample Multiplex Data Bus Architecture	2
2.	Data Encoding	5
3.	Word Formats	6
4.	Command and Status Sync	7
5.	Data Sync	7
6.	Information Transfer Formats	15
7.	Broadcast Information Transfer Formats	16
8.	Intermessage Gap and Response Time	18
9.	Data Bus Interface Using Trans. Coupling	19
10.	Data Bus Interface Using Direct Coupling	20
11.	Coupling Transformer	24
12.	Terminal I/O Characteristics for Transformer Coupled and Direct Coupled Stubs	24
13.	Output Waveform	26
	TABLES	
I.	Assigned Mode Codes	10
II.	Criteria for Acceptance or Rejection of a Terminal for the Noise Rejection Test	28
	APPENDIX	
10.	General	31
10.1	Redundancy	31
10.2	Bus Controller	31
10.3	Multiplex Selection Criteria	33
10.4	High Reliability Requirements	33
10.5	Stubbing	33
10.6	Use of Broadcast Option	34
* 10.7	Other related documents	34
* 20.	REFERENCED DOCUMENTS	34
* 30.	GENERAL REQUIREMENTS	
* 30.1	Option selection	34
* 30.2	Application	34
* 30.3	Unique address	34
* 30.4	Mode codes	35
* 30.4.1	Subaddress/mode	35
* 30.4.2	Required mode codes	35
* 30.4.2.1	Remote terminal required mode codes	35
* 30.4.2.2	Bus controller required mode codes	35
* 30.4.3	Reset remote terminal	35
* 30.4.4	Initiate RT self test	35

Supersedes page viii dated 12 February 1980.

CONTENTS (Cont'd)

Paragraph		Page
* 30.5	Status word bits	36
* 30.5.1	Information content	36
* 30.5.2	Status bit requirements	36
* 30.5.3	Busy bit	36
* 30.6	Broadcast	36
* 30.7	Data wrap-around	37
* 30.8	Message formats	37
* 30.9	RT to RT validation	37
* 30.10	Electrical characteristics	37
* 30.10.1	Cable shielding	37
* 30.10.2	Shielding	37
* 30.10.3	Connector polarity	37
* 30.10.4	Characteristic impedance	37
* 30.10.5	Stub coupling	38
* 30.10.6	Power on/off noise	38

APPENDIX FIGURES

10.1	Illustration of Possible Redundancy	32
10.2	Illustration of Possible Redundancy	32

Supersedes page viiia dated 12 February 1980.

10.3 Multiplex selection criteria. The selection of candidate signals for multiplexing is a function of the particular application involved, and criteria will in general vary from system to system. Obviously, those signals which have bandwidths of 400 Hz or less are prime candidates for inclusion on the bus. It is also obvious that video, audio, and high speed parallel digital signals should be excluded. The area of questionable application is usually between 400 Hz and 3KHz bandwidth. The transfer of these signals on the data bus will depend heavily upon the loading of the bus in a particular application. The decision must be based on projected future bus needs as well as the current loading. Another class of signals which in general are not suitable for multiplexing are those which can be typified by a low rate (over a mission) but possessing a high priority or urgency. Examples of such signals might be a nuclear event detector output or a missile launch alarm from a warning receiver. Such signals are usually better left hardwired, but they may be accommodated by the multiplex system if a direct connection to the bus controller's interrupt hardware is used to trigger a software action in response to the signal.

10.4 High reliability requirements. The use of simple parity for error detection within the multiplex bus system was dictated by a compromise between the need for reliable data transmission, system overhead, and remote terminal simplicity. Theoretical and empirical evidence indicates that an undetected bit error rate of 10^{-12} can be expected from a practical multiplex system built to this standard. If a particular signal requires a bit error rate which is better than that provided by the parity checking, then it is incumbent upon the system designer to provide the reliability within the constraints of the standard or to not include this signal within the multiplex bus system. A possible approach in this case would be to have the signal source and sink provide appropriate error detection and correction encoding/decoding and employ extra data words to transfer the information. Another approach would be to partition the message, transmit a portion at a time, and then verify (by interrogation) the proper transfer of each segment.

10.5 Stubbing. Stubbing is the method wherein a separate line is connected between the primary data bus line and a terminal. The direct connection of a stub line causes a mismatch which appears on the waveforms. This mismatch can be reduced by filtering at the receiver and by using bi-phase modulation. Stubs are often employed not only as a convenience in bus layout but as a means of coupling a unit to the line in such a manner that a fault on the stub or terminal will not greatly affect the transmission line operation. In this case, a network is employed in the stub line to provide isolation from the fault. These networks are also used for stubs that are of such length that the mismatch and reflection degrades bus operation. The preferred method of stubbing is to use transformer coupled stubs, as defined in 4.5.1.5.1. This method provides the benefits of DC isolation, increased common mode protection, a doubling of effective stub impedance, and fault isolation for the entire stub and terminal. Direct coupled stubs, as defined in 4.5.1.5.2 of this standard, should be avoided if at all possible. Direct coupled stubs provide no DC isolation or common mode rejection for the terminal external to its subsystem. Further, any shorting fault between the subsystems internal isolation resistors (usually on a circuit board) and the main bus junction will cause failure of that entire bus. It can be expected that when the direct coupled stub length exceeds 1.6 feet, that it will begin to distort the main bus waveforms. Note that this length includes the cable runs internal to a given subsystem.

* 10.6 Use of broadcast option. The use of a broadcast message as defined in 4.3.3.6.7 of this standard represents a significant departure from the basic philosophy of this standard in that it is a message format which does not provide positive closed-loop control of bus traffic. The system designer is strongly encouraged to solve any design problems through the use of the three basic message formats without resorting to use of the broadcast option. If system designers do choose to use the broadcast command, they should carefully consider the potential effects of a missed broadcast message, and the subsequent implications for fault or error recovery design in the remote terminals and bus controllers.

* 10.7 Other related documents. Several documents exist which are related to this standard. MIL-HDBK-1553 describes implementation practices for this standard and other related data. This standard is embodied in or referenced by the following international documents: NATO STANAG 3838, ASCC Air Standard 50/2, and UK DEF STAN 00-18 (PART 2)/Issue 1.

* 20. REFERENCED DOCUMENTS

Not applicable.

* 30. GENERAL REQUIREMENTS

* 30.1 Option selection. This section of the appendix shall select those options required to further define portions of the standard to enhance tri-service interoperability. References in parentheses are to paragraphs in this standard which are affected.

* 30.2 Application. Section 30 of this appendix shall apply to all dual standby redundant applications for the Army, Navy, and Air Force. All Air Force aircraft internal avionics applications shall be dual standby redundant, except where safety critical or flight critical requirements dictate a higher level of redundancy.

* 30.3 Unique address (4.3.3.5.1.2). All remote terminals shall be capable of being assigned any unique address from decimal address 0 (00000) through decimal address 30 (11110). The address shall be established through an external connector, which is part of the system wiring and connects to the remote terminal. Changing the unique address of a remote terminal shall not require the physical modification or manipulation of any part of the remote terminal. The remote terminal shall, as a minimum, determine and validate its address during power-up conditions. No single point failure shall cause a terminal to validate a false address. The remote terminal shall not respond to any messages if it has determined its unique address is not valid.

* 30.4 Mode codes (4.3.3.5.1.7)

* 30.4.1 Subaddress/mode (4.3.3.5.1.4). An RT shall have the capability to respond to mode codes with both subaddress/mode of 00000 and 11111. Bus controllers shall have the capability to issue mode commands with both subaddress/mode of 00000 and 11111. The subaddress/mode of 00000 and 11111 shall not convey different information.

* 30.4.2 Required mode codes (4.3.3.5.1.7)

* 30.4.2.1 Remote terminal required mode codes. An RT shall implement the following mode codes as a minimum:

Mode Code	Function
00010	Transmit status word
00100	Transmitter shutdown
00101	Override transmitter shutdown
01000	Reset remote terminal

* 30.4.2.2 Bus controller required mode codes. The bus controller shall have the capability to implement all of the mode codes as defined in 4.3.3.5.1.7. For Air Force applications, the dynamic bus control mode command shall never be issued by the bus controller.

* 30.4.3 Reset remote terminal (4.3.3.5.1.7.9). An RT receiving the reset remote terminal mode code shall respond with a status word as specified in 4.3.3.5.1.7.9 and then reset. While the RT is being reset, the RT shall respond to a valid command with any of the following: no response on either data bus, status word transmitted with the busy bit set, or normal response. If any data is transmitted from the RT while it is being reset, the information content of the data shall be valid. An RT receiving this mode code shall complete the reset function within 5.0 milliseconds following transmission of the status word specified in 4.3.3.5.1.7.9. The time shall be measured from the mid-bit zero crossing of the parity bit of the status word to the mid-sync zero crossing of the command word at point A on figures 9 and 10.

* 30.4.4 Initiate RT self test (4.3.3.5.1.7.4). If the initiate self test mode command is implemented in the RT, then the RT receiving the initiate self test mode code shall respond with a status word as specified in 4.3.3.5.1.7.4 and then initiate the RT self test function. Subsequent valid commands may terminate the self-test function. While the RT self test is in progress, the RT shall respond to a valid command with any of the following: no response on either data bus, status word transmitted with the busy bit set, or normal response. If any data is transmitted from the RT while it is in self test, the information content of the data shall be valid. An RT receiving this mode code shall complete the self test function and have the results of the self test available within 100.0 milliseconds following transmission of the status word specified in 4.3.3.5.1.7.4. The time shall be measured from the mid-bit zero crossing of the parity bit of the status word to the mid-sync zero crossing of the command word at point A on figures 9 and 10.

Supersedes page 35 dated 12 February 1980.

* 30.5 Status word bits (4.3.3.5.3)

30.5.1 Information content. The status word transmitted by an RT shall contain valid information at all times, e.g., following RT power up, during initialization, and during normal operation.

* 30.5.2 Status bit requirements (4.3.3.5.3). An RT shall implement the status bits as follows:

Message error bit (4.3.3.5.3.3) - Required

Instrumentation bit (4.3.3.5.3.4) - Always logic zero

Service request bit (4.3.3.5.3.5) - Optional

Reserved status bits (4.3.3.5.3.6) - Always logic zero

Broadcast command received bit (4.3.3.5.3.7) - If the RT implements the broadcast option, then this bit shall be required.

Busy bit (4.3.3.5.3.8) - As required by 30.5.3

Subsystem flag bit (4.3.3.5.3.9) - If an associated subsystem has the capability for self test, then this bit shall be required.

Dynamic bus control acceptance bit (4.3.3.5.3.10) - If the RT implements the dynamic bus control function, then this bit shall be required.

Terminal flag bit (4.3.3.5.3.11) - If an RT has the capability for self test, then this bit shall be required.

* 30.5.3 Busy bit (4.3.3.5.3.8). The existence of busy conditions is discouraged. However, any busy condition, in the RT or the subsystem interface that would affect communication over the bus shall be conveyed via the busy bit. Busy conditions, and thus the setting of the busy bit, shall occur only as a result of particular commands/messages sent to an RT. Thus for a non-failed RT, the bus controller can, with prior knowledge of the remote terminal characteristics, determine when the remote terminal can become busy and when it will not be busy. However, the RT may also set the busy bit (in addition to setting the terminal flag bit or subsystem flag bit) as a result of failure/fault conditions within the RT/subsystem.

* 30.6 Broadcast (4.3.3.6.7). The only broadcast commands allowed to be transmitted on the data bus by the bus controller shall be the broadcast mode commands identified in table 1. The broadcast option may be implemented in remote terminals. However, if implemented, the RT shall be capable of distinguishing between a broadcast and a non-broadcast message to the same subaddress for non-mode command messages. The RT address of 11111 is still reserved for broadcast and shall not be used for any other purpose.

* 30.7 Data wrap-around (4.3.3.5.1.4). Remote terminals shall provide a receive subaddress to which one to N data words of any bit pattern can be received. Remote terminals shall provide a transmit subaddress from which a minimum of N data words can be transmitted. N is equal to the maximum word count from the set of all messages defined for the RT. A valid receive message to the data wrap-around receive subaddress followed by a valid transmit command to the data wrap-around transmit subaddress, with the same word count and without any intervening valid commands to that RT, shall cause the RT to respond with each data word having the same bit pattern as the corresponding received data word. A data wrap-around receive and transmit subaddress of 30 (11110) is desired.

* 30.8 Message formats (4.3.3.6). Remote terminals shall, as a minimum, implement the following non-broadcast message formats as defined in 4.3.3.6: RT to BC transfers, BC to RT transfers, RT to RT transfers (receive and transmit), and mode command without data word transfers. For non-broadcast messages, the RT shall not distinguish between data received during a BC to RT transfer or data received during a RT to RT transfer (receive) to the same subaddress. The RT shall not distinguish between data to be transmitted during an RT to BC transfer or data to be transmitted during an RT to RT transfer (transmit) from the same subaddress. Bus controllers shall have the capability to issue all message formats defined in 4.3.3.6.

* 30.9 RT to RT validation (4.3.3.9). For RT to RT transfers, in addition to the validation criteria specified in 4.4.3.6, if a valid receive command is received by the RT and the first data word is received after 57.0 plus or minus 3.0 microseconds, the RT shall consider the message invalid and respond as specified in 4.4.3.6. The time shall be measured from the mid-bit zero crossing of the parity bit of the receive command to the mid-sync zero crossing of the first expected data word at point A as shown on figures 9 and 10. It is recommended that the receiving RT of an RT to RT transfer verify the proper occurrence of the transmit command word and status word as specified in 4.3.3.6.3.

* 30.10 Electrical characteristics (4.5)

* 30.10.1 Cable shielding (4.5.1.1). The cable shield shall provide a minimum of 90.0 percent coverage.

* 30.10.2 Shielding (4.5.1). All cable to connector junctions, cable terminations, and bus-stub junctions shall have continuous 360 degree shielding which shall provide a minimum of 75.0 percent coverage.

* 30.10.3 Connector polarity. For applications that use concentric connectors or inserts for each bus, the center pin of the connector or insert shall be used for the high (positive) Manchester bi-phase signal. The inner ring shall be used for the low (negative) Manchester bi-phase signal.

* 30.10.4 Characteristic impedance (4.5.1.2). The actual (not nominal) characteristic impedance of the data bus cable shall be within the range of 70.0 ohms to 85.0 ohms at a sinusoidal frequency of 1.0 megahertz.

* 30.10.5 Stub coupling (4.5.1.5). For Navy applications, each terminal shall have both transformer and direct coupled stub connections externally available. For Navy systems using these terminals, either transformer or direct coupled connections may be used. For Army and Air Force applications, each terminal shall have transformer coupled stub connections, but may also have direct coupled stub connections. For Army and Air Force systems, only transformer coupled stub connections shall be used. Unused terminal connections shall have a minimum of 75 percent shielding coverage.

* 30.10.6 Power on/off noise. A terminal shall limit any spurious output during a power-up or power-down sequence. The maximum allowable output noise amplitude shall be ±250 mV peak, line-to-line for transformer coupled stubs and ±90 mV peak, line-to-line for direct coupled stubs, measured at point A of figure 12.

NOTICE
OF VALIDATION

INCH–POUND

MIL–STD–1553B
Notice 3
31 January 1993

MILITARY STANDARD

DIGITAL TIME DIVISION COMMAND/RESPONSE MULTIPLEX DATA BUS

MIL–STD–1553B, dated 21 September 1978, has been reviewed and determined to be valid for use in acquisition.

Custodians:
Army – ER
Navy – AS
Air Force – 11

Preparing activity:
Air Force – 11

AMSC: N/A

FSC: MCCR

DISTRIBUTION STATEMENT A. Approved for public release; distribution is unlimited.

NOTICE OF CHANGE

INCH–POUND

MIL–STD–1553B
NOTICE 4
15 January1996

DEPARTMENT OF DEFENSE

INTERFACE STANDARD
FOR

DIGITAL TIME DIVISION COMMAND/RESPONSE
MULTIPLEX DATA BUS

TO ALL HOLDERS OF MIL–STD–1553B:

1. THE FOLLOWING PAGES OF MIL–STD–1553B HAVE BEEN REVISED AND SUPERSEDE THE PAGES LISTED:

NEW PAGE	DATE	SUPERSEDED PAGE	DATE
Cover Page	15 January 1996	Cover Page	21 September 1978
ii	15 January 1996	ii	21 September 1978

2. RETAIN THIS NOTICE AND INSERT BEFORE TABLE OF CONTENTS.

3. Holders of MIL–STD–1553B will verify that page changes and additions indicated above have been entered. This notice page will be retained as a check sheet. This issuance, together with appended pages, is a separate publication. Each notice is to be retained by stocking points until the military standard is completely revised or cancelled.

Custodians:
Army – ER
Navy – AS

Preparing activity:
Air Force – 11

AMSC: N/A

AREA: MCCR

DISTRIBUTION STATEMENT A. Approved for public release; distribution is unlimited.

NOTE: Notice 4, dated 15 January 1996, changes the cover page of this standard for administrative reasons. There are no other changes to this document.

INCH–POUND

MIL–STD–1553B
21 SEPTEMBER 1978
SUPERSEDING
MIL–STD–1553A
30 APRIL 1975

DEPARTMENT OF DEFENSE

INTERFACE STANDARD

FOR

DIGITAL TIME DIVISION COMMAND/RESPONSE MULTIPLEX DATA BUS

AMSC N/A

AREA MCCR

DISTRIBUTION STATEMENT A. Approved for public release; distribution is unlimited.

Supersedes cover page of MIL–STD–1553B, dated 21 September 1978

DEPARTMENT OF DEFENSE
Washington DC 20360

DIGITAL TIME DIVISION COMMAND/RESPONSE MULTIPLEX DATA BUS

1. This standard is approved for use by all Departments and Agencies of the Department of Defense.

2. Beneficial comments (recommendations, additions, deletions) and any pertinent data which may be of use in improving this document should be addressed to: ASC/ENSI, Bldg 125, 2335 Seventh Street, Suite 6, Wright-Patterson AFB OH 45433-7809 by using the Standardization Document Improvement Proposal (DD Form 1426) appearing at the end of this document or by letter.

Supersedes page ii of MIL-STD-1553B, dated 21 September 1978.