CONTRACTOR
LIBRARY

Microwave Limb Sounder (MLS) Sensor Technology and Instrumentation Study for NPOESS

presentation by Joe Waters
California Institute of Technology, Jet Propulsion Laboratory

Internal Government Study (IGS) Summary Presentations
Integrated Program Office, Silver Spring MD
19 December 1996

MLS homepage = http://mls.jpl.nasa.gov

CONTRACTOR
LIBRARY

Presentation Outline

- **Programmatic Overview**
- **Features of MLS Measurement Technique**
- **Heritage from UARS MLS**
- **"MLS Ozone Monitor" for ozone profiles**
  - Instrument Concept Description
  - Performance Estimates
  - Risk Assessment
- **"Array MLS" for broader range of applications**

MLS Sensor Study for NPOESS

- **Task started 12 September 1996**

- **Scope (as stated in JPL Task Plan 70-4409)**
  - Evaluate the applicability of MLS technique to achieve NPOESS goals
  - Describe an instrument concept and required technology
  - Define preliminary spacecraft and launch vehicle accommodation requirements
  - Formulate the instrument and technology development plan to instrument PDR
  - Final Report for FY96 efforts due February 1997

MLS Sensor Concepts Being Considered

- **"MLS Ozone Monitor" for ozone profiles**
  - Develop concept for smallest (mass, volume, power) MLS to monitor ozone profiles
  - Identify impact of adding important related measurements: ClO, HCl, N_2O, others?
- **"Array MLS" for a broader range of applications**
  - An advanced instrument concept using emerging integrated circuit array technology to provide complete mapping capability and limb sounding of the troposphere as well as the stratosphere and mesosphere
  - Some of the Array MLS potential measurement capability includes:
    - Temperature, pressure, water vapor throughout the troposphere, stratosphere and mesosphere
    - Liquid water in the middle and lower troposphere
    - Ice content of dense cirrus in the upper troposphere
    - Ozone, CO and perhaps other gases, from the upper troposphere through the mesosphere and higher
  - This is the primary effort proposed for study in FY97

Features of MLS Measurement Technique

- Measurements not degraded by cirrus, polar stratospheric clouds or volcanic aerosols; less affected by liquid water than other techniques
- Measurements are made continuously at all times of day and night
- Can measure many atmospheric gases, temperature and pressure
- Can spectrally-resolve emission lines at all altitudes; gives better vertical resolution and allows measurements of weak lines in presence of nearby strong ones
- Composition measurements are relatively insensitive to uncertainties in atmospheric temperature
- Very accurate spectroscopic data base
- Instrumentation features:
  - excellent sensitivity, calibration accuracy and stability
  - vertical resolution (down to ~1km) is set by antenna size
  - emerging array technology can provide complete horizontal coverage between orbital tracks

MLS Sensor Study for NPOESS

Heritage from UARS MLS (designed for upper atmosphere)

- All data products for which UARS MLS was designed have been validated and their quality documented in peer-reviewed journal publications (the data validation papers are in *J. Geophys. Res.*, vol. 101, no. D6, 30 April 1996):
  - Stratospheric O_3 profiles
  - Stratospheric H_2O profiles
  - Stratospheric ClO profiles
  - Stratospheric temperature and pressure profiles
- Additional data products obtained:
  - Profiles of SO_2 injected into the stratosphere by volcanic eruptions
  - Profiles of upper tropospheric H_2O
  - Profiles of lower stratospheric HNO_3
  - Profiles to lower altitudes than for which the instrument was designed
  - Profiles of atmospheric variances associated with gravity wave activity
  - Geopotential height (not yet published)
  - Ice content of dense cirrus (not yet published)

Heritage from UARS MLS (continued)

- Demonstration of absolute calibration
  - All calibration traceable to first principles and fundamental standards
  - No adjustments have been required from comparisons with correlative data
  - Demonstrated absolute accuracy for stratospheric ozone, over the altitude region for which the instrument design was optimized (~0.5-20 hPa), is 5% or better
- Demonstration of calibration stability
  - No calibration changes detected after more than 5 years in orbit; ***demonstrated upper limits*** on end-to-end calibration change are:
    - < 1% over 5 years, from instrument engineering and space-view analyses
    - < ~0.1% over 5 years from examination of retrieved tropical temperatures
- Demonstration of vertical resolution
  - 5 km vertical resolution has been demonstrated in production processing to date
  - Algorithms now under development for retrievals with 3 km vertical resolution; there are trade-offs between vertical resolution and precision
- Demonstration of reliable and quick data processing
  - Scientifically useful data obtained within one week of launch
  - Data are processed and made public with latency < 2 days, limited by UARS operations. (Data can, in principle, be processed with latency of a few minutes.)

MLS Sensor Study for NPOESS

Comparison of MLS and SAGE II Ozone

- From Cunnold et al., *J. Geophys. Res. 101*, 10,061-10,075 (1996)

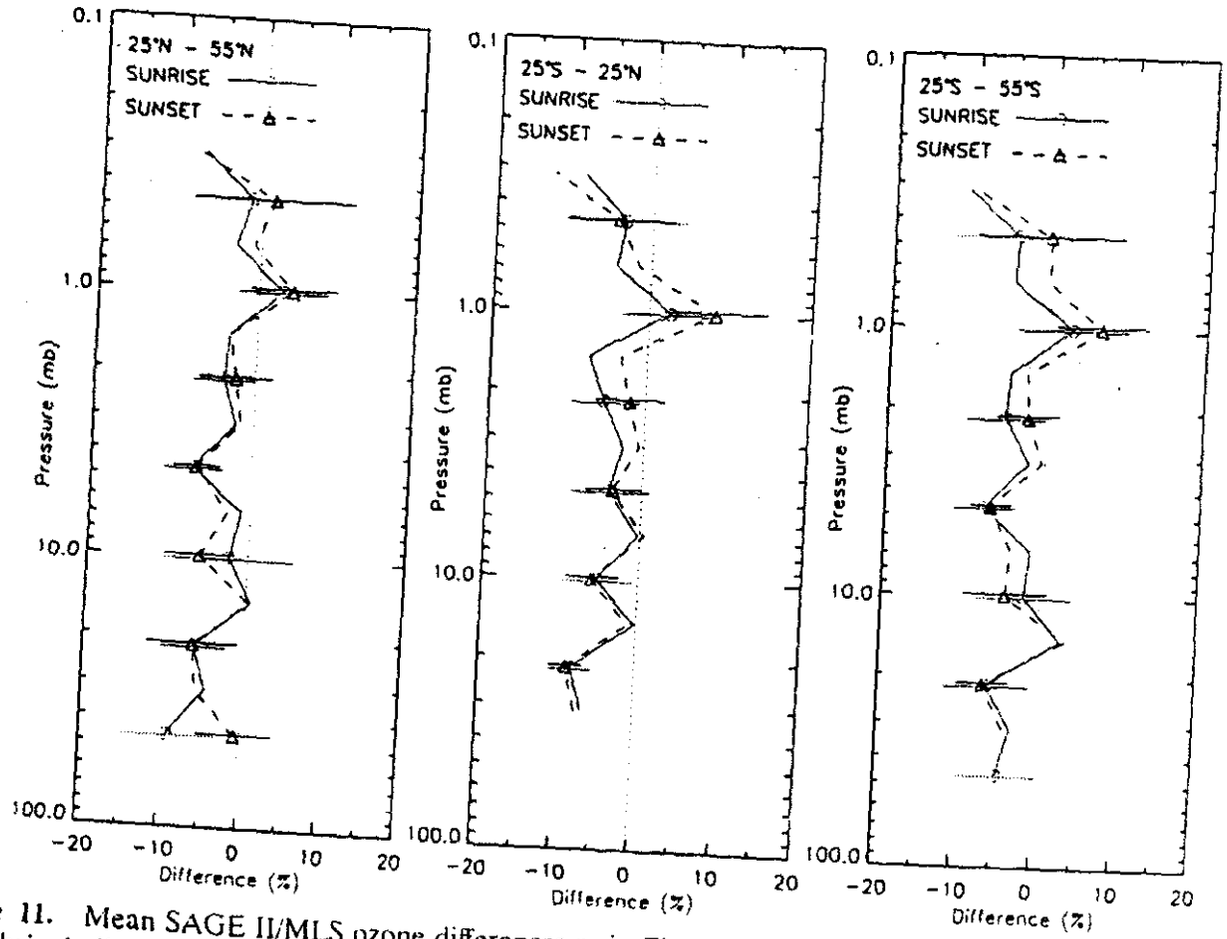

Figure 11. Mean SAGE II/MLS ozone differences as in Figure 3 expressed as (SAGE II-MLS)/MLS × 100 but only including those measurements when the 1.02-μm aerosol loading was less than 2×10^{-3} for pressures greater than 20 mbar and less than 5×10^{-4} for pressures less than 20 mbar.

MLS Sensor Study for NPOESS

Comparison of TOMS and MLS Ozone

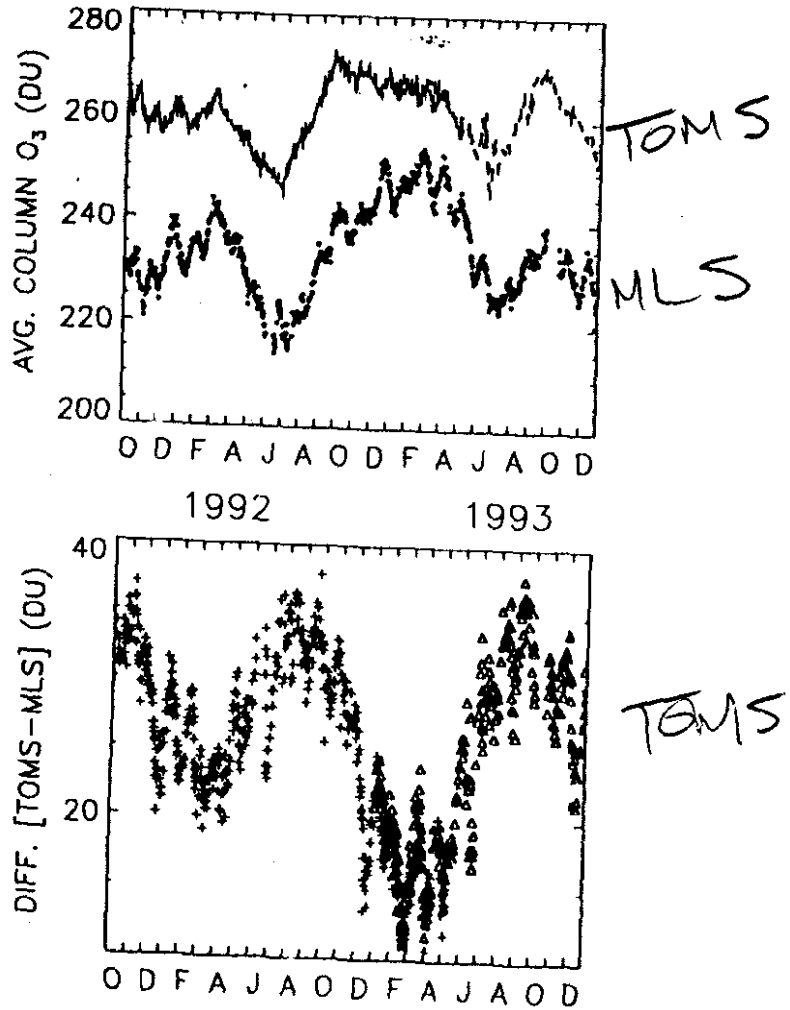

FIG. 12. MLS and TOMS ozone column values for the 5°–10°S bin, during the period 1 October 1991–31 December 1993. Top panel: *Nimbus-7* TOMS total column data are represented as a solid line, *Meteor-3* data as a dashed line (this overlaps the solid line for 1 January 1993–6 May 1993), and MLS column (above 100 hPa) as dots. Bottom panel: Residual difference between the TOMS and MLS column amounts. Plus symbols are for *Nimbus-7* TOMS minus MLS, and triangles are for *Meteor-3* TOMS minus MLS.

- See Froidevaux et al., *J. Atmos. Sci. 51*, 2846-2866 (1994)

MLS Sensor Study for NPOESS

"MLS Ozone Monitor" for ozone profiles

- **Scope**
  - Develop concept for small MLS to monitor ozone profiles
  - Identify impact of adding important related measurements: ClO, HCl, N_2O, ...
- **Concept Overview**
  - Based on UARS MLS, but takes advantage of new technology developed for EOS MLS
  - Uses 3x higher frequencies than UARS to reduce antenna size by 3x for same vertical resolution
  - Contains two radiometers → has 2100 GHz channel → (review trace gas cost benefit analysis [illegible])
    - 640 GHz, like EOS MLS, for 634.461 GHz ozone line (with options for ClO, HCl, N_2O lines covered by same radiometer; possibly others)
    - 370 GHz for tangent pressure ("pointing") measurement from 368.498 GHz O_2; this also provides temperature profiles at no additional instrument cost, as well as geopotential height if platform stability is adequately montored
  - Uses low-power EOS MLS filter banks (spectrometers)
  - Instrument "looks" at limb in orbit plane for pole-to-pole coverage from polar orbit

MLS Ozone Monitor: size comparison with UARS MLS

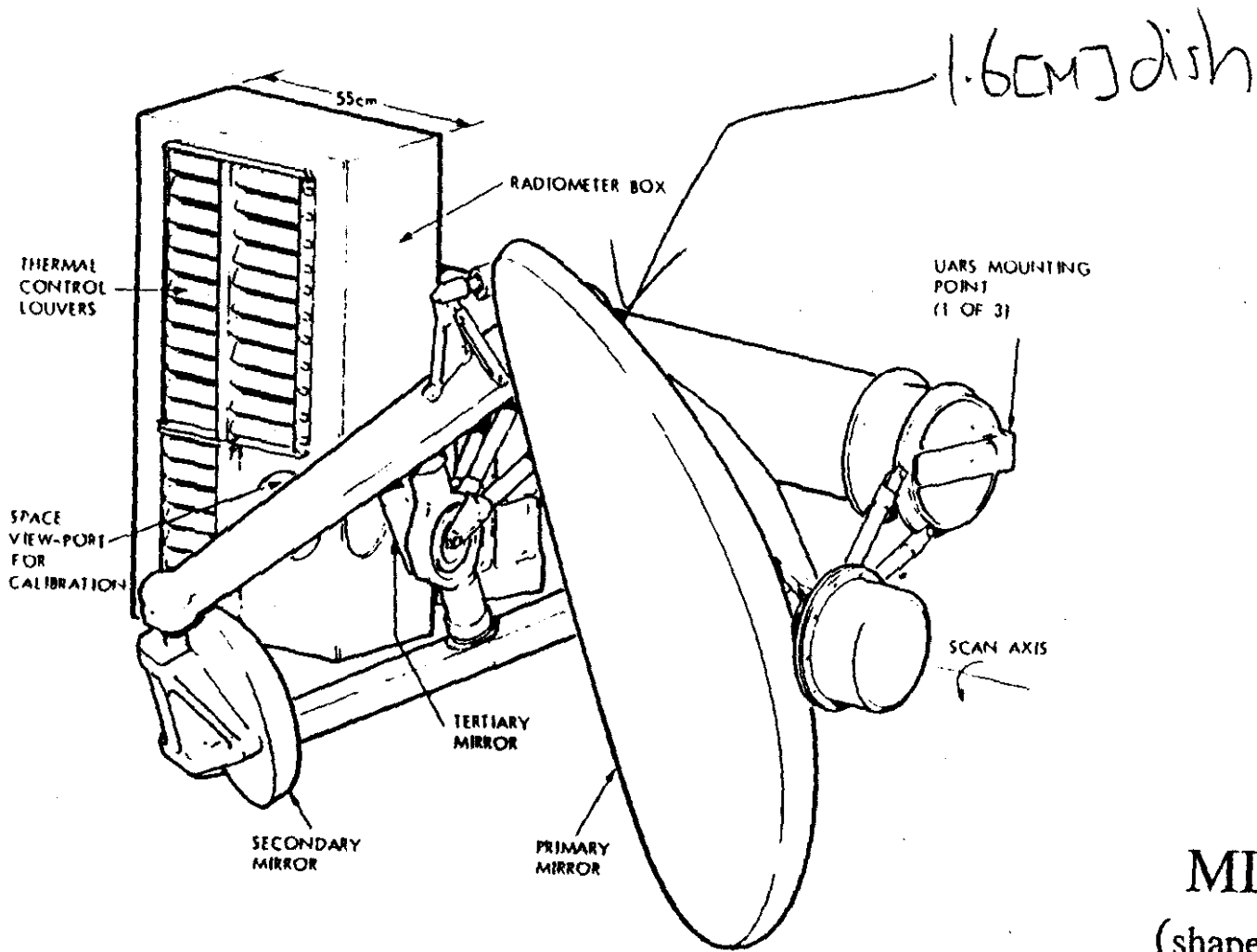

UARS MLS

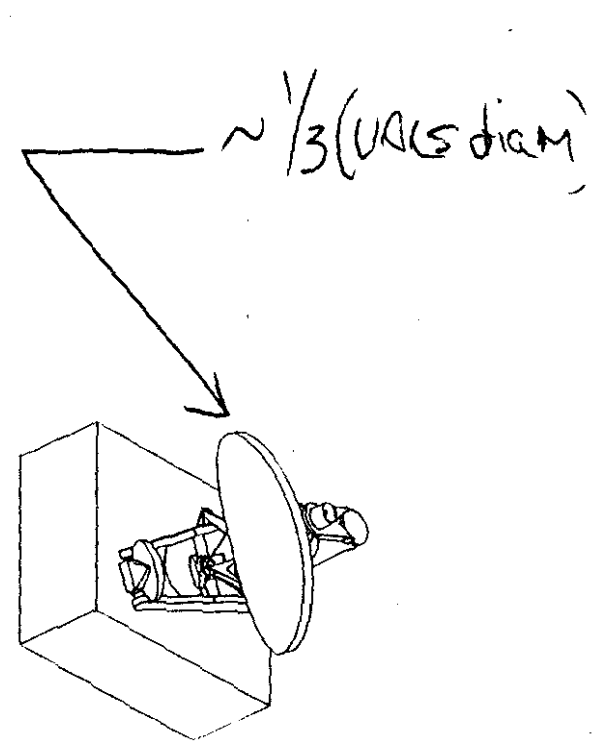

MLS Ozone Monitor

(shape of "radiometer box" to left of antenna can be modified if needed for accommodation on platform)

MLS Ozone Monitor: dimensional sketch

The shape of "radiometer box" can be modified if needed to ease accommodation on platform; the overall size of this box can likely be reduced with further design effort

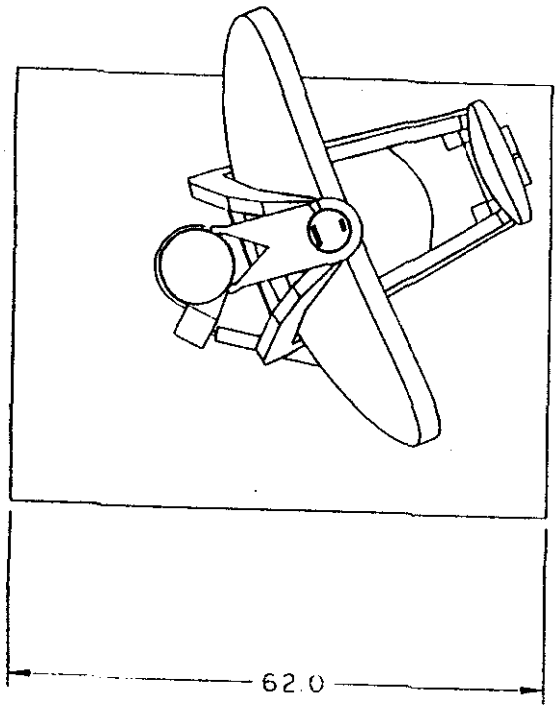

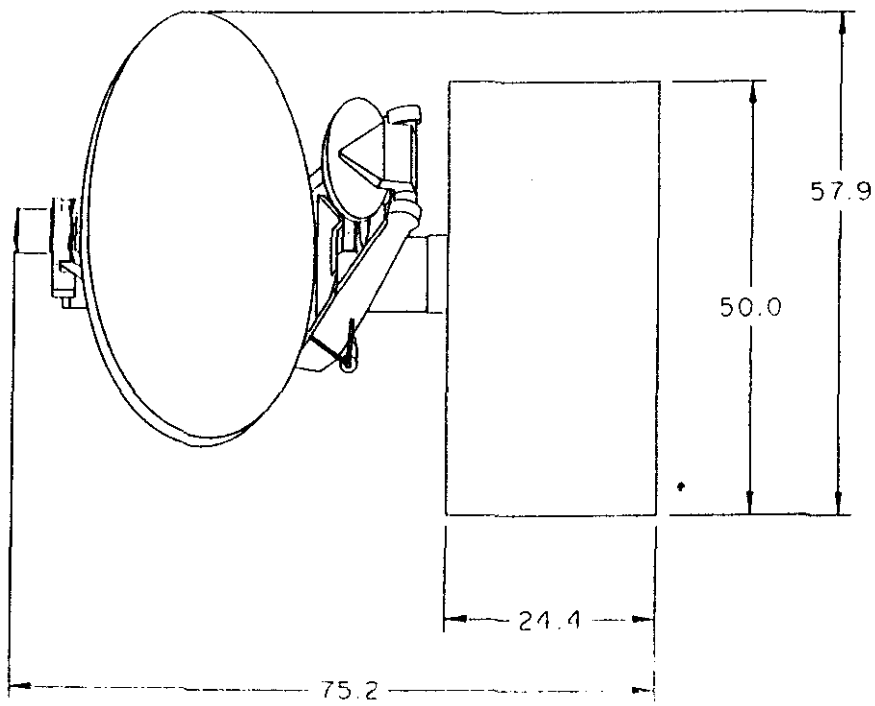

dimensions are given in cm

MLS Ozone Monitor Block Diagram

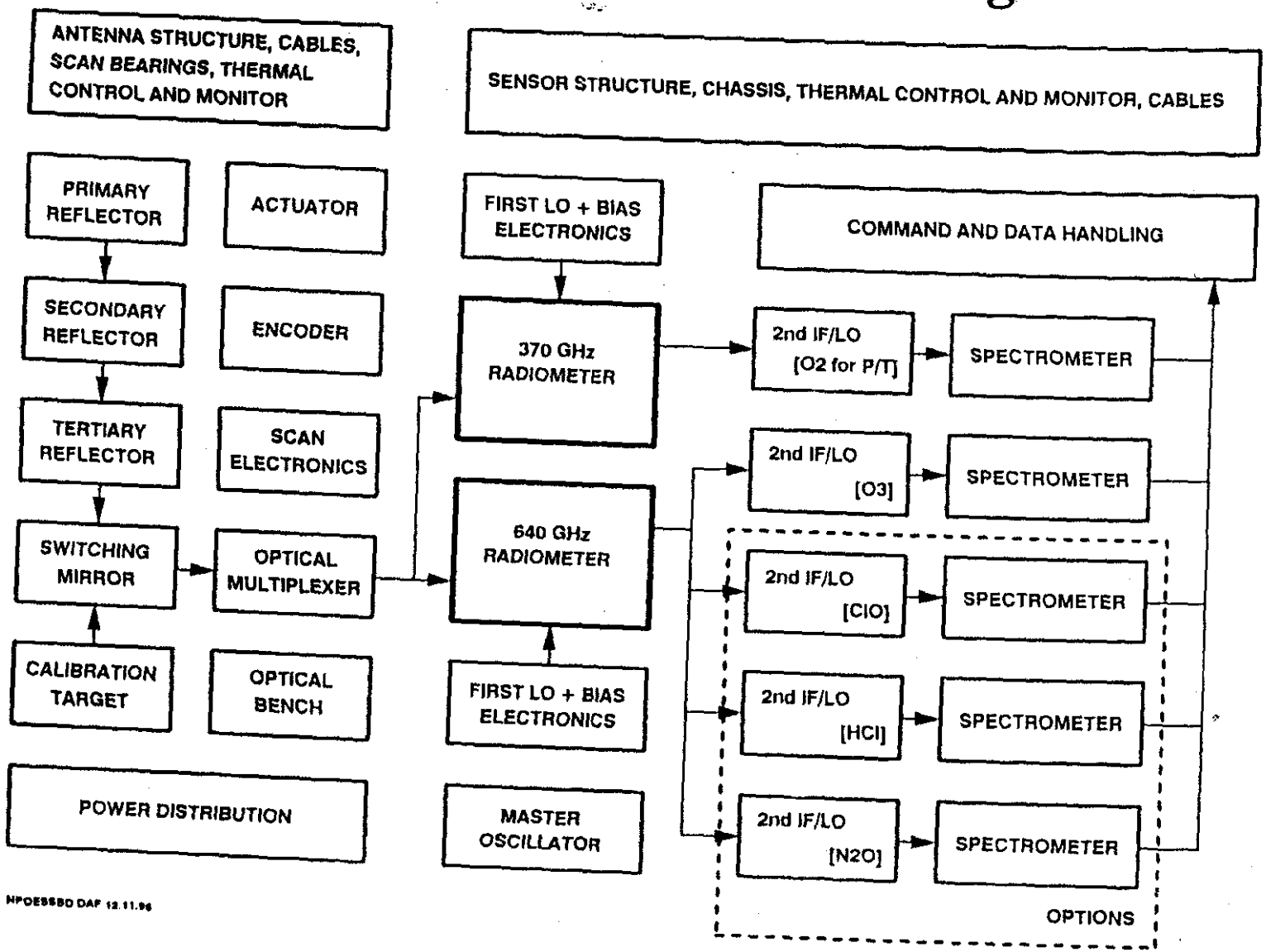

MLS Ozone Monitor: Mass and Power Estimates

- **Mass**
  - Current best estimate: 78 kg
  - Recommended contingency: 16 kg
  - Additional required for each optional measurement: 5 kg × 3 = 15 [kg]
- **Power**
  - Current best estimate: 79 W
  - Recommended contingency: 16 W
  - Additional required for each optional measurement: 10 W × 3 = 30 [W]
- **Detailed budget for estimates on following chart**

MLS Sensor Study for NPOESS

MLS Ozone Monitor: details of mass/power estimates

Item #	Equipment List	Mass, kg	Size, mm	Power, avg, W	Comments, Heritage MASS	POWER
	ANTENNA					
1	Primary reflector	2.2	550x280		100% of EOS Sec	
2	Secondary reflector	0.4			20% of EOS	
3	Tertiary reflector	0.4			100% of EOS	
4	Support structure	9.0			A frame + torque tube	
5	Scan actuator	4.0		4.0	100% of EOS	100% of EOS
6	Scan encoder	2.6		3.0	100% of EOS	100% of EOS
7	Thermal control and monitor	1.0		2.6	25% of EOS	100% of EOS
8	Bipod bearing	0.8			50% of EOS	
9	Tripod bearing	1.0			50% of EOS	
10	Cable harness	1.2			50% of EOS	
	SENSOR ASSEMBLY					
11	Sensor structure/chassis	12.0			~30% of Sensor total	
12	Scan/Cal electronics	1.5	400x200x50	1.2	100% of EOS	100% of EOS
13	Switching mirror	0.4			100% of EOS	
14	Calibration target	1.7	200x200x200		50% of EOS	
15	Mirror actuator	3.5		1.7	100% of EOS	100% of EOS
16	Mirror encoder	2.5		1.0	100% of EOS	100% of EOS
17	370 GHz front-end	1.0		2.2	≈640 GHz est	≈640 GHz est
18	First LO	3.0	200x200x50	7.5	75% of 640 GHz est	≈640 GHz est
19	Bias electronics	1.5	100x200x50	0.3	≈640 GHz est	≈640 GHz est
20	Second IF/LO	1.0	100x200x50	3.5	100% of EOS	≈640 GHz est
21	640 GHz front-end	1.0		2.2	100% of EOS	50% of EOS
22	First LO	4.1	200x200x50	7.5	100% of EOS	100% of EOS
23	Bias electronics	1.5	100x200x50	0.3	100% of EOS	100% of EOS
24	Second IF/LO	1.0	100x200x50	3.5	100% of EOS	100% of EOS
25	Optical bench	2.0			25% of EOS	
26	Optical elements	0.8			25% of EOS	
27	Master oscillator	1.0	100x200x50	4.0	100% of EOS	100% of EOS
28	Filter banks (2)	3.6	200x200x50	5.2	100% of EOS	100% of EOS
29	Power Distribution	1.0	200x200x50	19.8	25% of EOS	75% efficiency
30	C&DH	2.5	200x200x50	6.5	50% of EOS	100% of EOS
31	Thermal control and monitor	4.0			33% of EOS	
32	RIUs (6)	2.0		3.0	100% of EOS	100% of EOS
33	Cable Harness	3.0			25% of EOS	
	TOTAL	78.2	kg	79.0 W		

	Recommended Contingency	16.0	kg	16.0 W	about 20%	about 20%

	Each additional 2nd IF/LO, FB +	5.0		10.0	Includes Cables, structure overhead, and contingency.	Includes efficiency and contingency.
	TOTAL (for 3)	15.0	kg	30.0 W		

Dennis A. Flower 12/11/96 8:29

MLS Ozone Monitor: Expected Performance

- **Calibration**
  - Absolute accuracy of 5% or better in retrieved ozone profiles
  - Stability better than 1% per decade
- **Precision**
  - 0.1 ppmv (~1-10%, depending upon altitude) for individual profiles
  - 0.02 ppmv (~0.2-2%, depending upon altitude) for daily 5° zonal means
- **Vertical Resolution**
  - 5 km (3 km goal) with ~0.5m antenna; proportionally better with larger antenna
- **Vertical Coverage**
  - Lower stratosphere to mesosphere (upper troposphere goal)
- **Global and Temporal Coverage**
  - Pole-to-pole latitude coverage on each orbit (for polar-orbiting platform)
  - Continuous measurements along orbit, day and night during all solar conditions
  - Daily global maps with ~250 km resolution along measurement track (similar to UARS MLS maps shown on following chart)

MLS Sensor Study for NPOESS

UARS MLS maps of Ozone and ClO

- From Waters et al., *Nature 362*, 597-602 (1993)

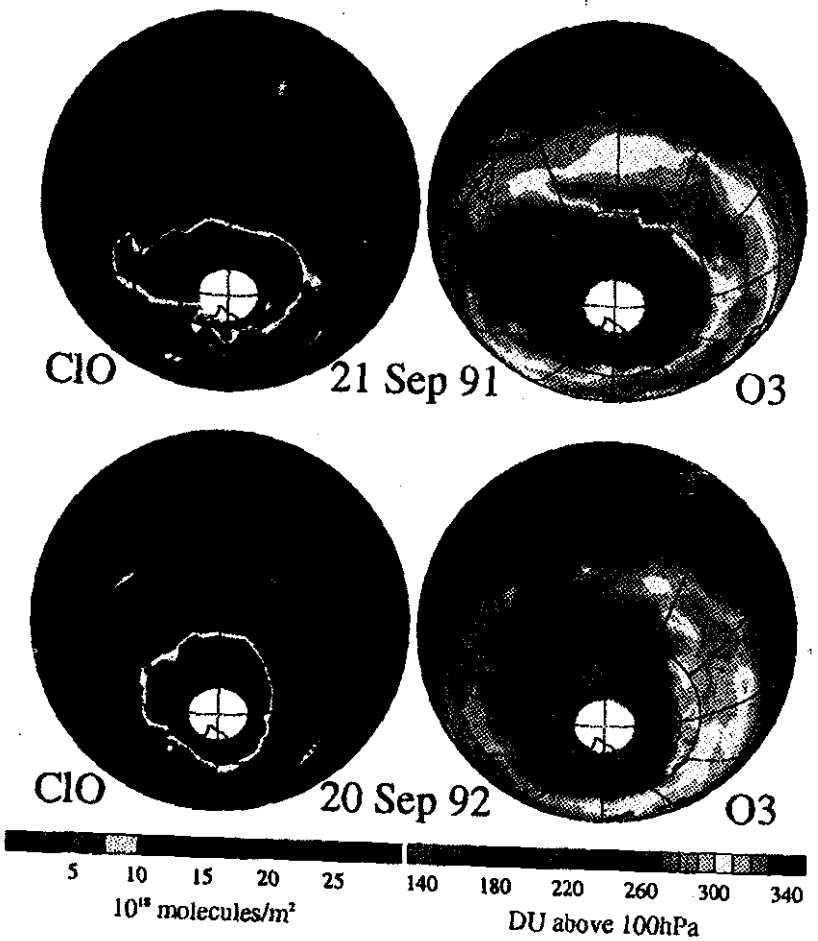

Chlorine monoxide (ClO) and ozone (O3) in the southern hemisphere from NASA's Upper Atmosphere Research Satellite. ClO is the dominant form of reactive chlorine that destroys ozone. The white circular area around the pole is where no measurements are obtained.

MLS Ozone Monitor (MOM) for NPOESS: Risk Assessment by the JPL MLS Team

- **Technology and system performance - low risk, because:**
  - All technology in MOM is currently in advanced stages of development for EOS MLS; the EOS MLS schedule leads the NPOESS schedule by ~ 5 years
  - Radiometers in the highest-frequency 640 GHz band have been in use successfully for more than 5 years on the balloon-borne Submillimeter Limb Sounder
  - The overall MOM system design follows that of UARS MLS, and is simpler
- **Calibration, resolution, etc. - low risk, because:**
  - The JPL experience with UARS MLS, which has demonstrated the performance in these areas, is directly applicable to MOM
  - The MOM field-of-view characteristics will be the same or better than UARS MLS
  - The needed spectroscopic data are already available, except for measured line-broadening parameters which can be readily obtained with the needed accuracy
  - EOS MLS development provides experience in the spectral ranges for MOM
- **The MLS Ozone Monitor performance estimates can be achieved with overall low risk**

MLS Ozone Monitor (MOM): Summary

- **Meets NPOESS requirements for ozone profile monitoring**
- **Has important and unique features:**
  - Measurements not degraded by aerosols, cirrus, polar stratospheric clouds
  - Pole-to-pole latitude coverage on each orbit
  - Continuous measurements along orbit, day and night during all solar conditions
  - Required tangent pressure ("pointing") measurement also provides temperature profiles, and geopotential height if platform stability is adequately monitored
  - Daily global maps with ~250 km resolution along measurement track
  - Can provide important related measurements (ClO, HCl, N_2O, ...) which are needed for helping understand observed ozone changes
- **Overall risk is low**
  - Needed performance has been demonstrated by UARS MLS
  - UARS results are directly scalable to MOM
  - System design follows that of UARS MLS, but is simpler
  - New technology has been used on balloon instrument since 1991
  - New technology is being used in EOS MLS which is scheduled for launch ~5 years earlier than NPOESS

Array MLS for a broader range of applications

- Development of this concept is the primary effort proposed for study in FY97
- Concept is for an advanced array instrument using emerging integrated circuit technology to provide orbit-to-orbit mapping capability and limb sounding of the troposphere as well as the stratosphere (and higher)
- Some of the potential measurement capability includes:
  - Temperature, pressure, water vapor throughout the troposphere, stratosphere, and mesosphere
  - Liquid water in the mid/lower troposphere
  - Ice content of dense cirrus in the upper troposphere
  - Ozone, CO and perhaps other gases, from the upper troposphere through the mesosphere and higher

MLS Sensor Study for NPOESS

Array MLS: Concept and Coverage

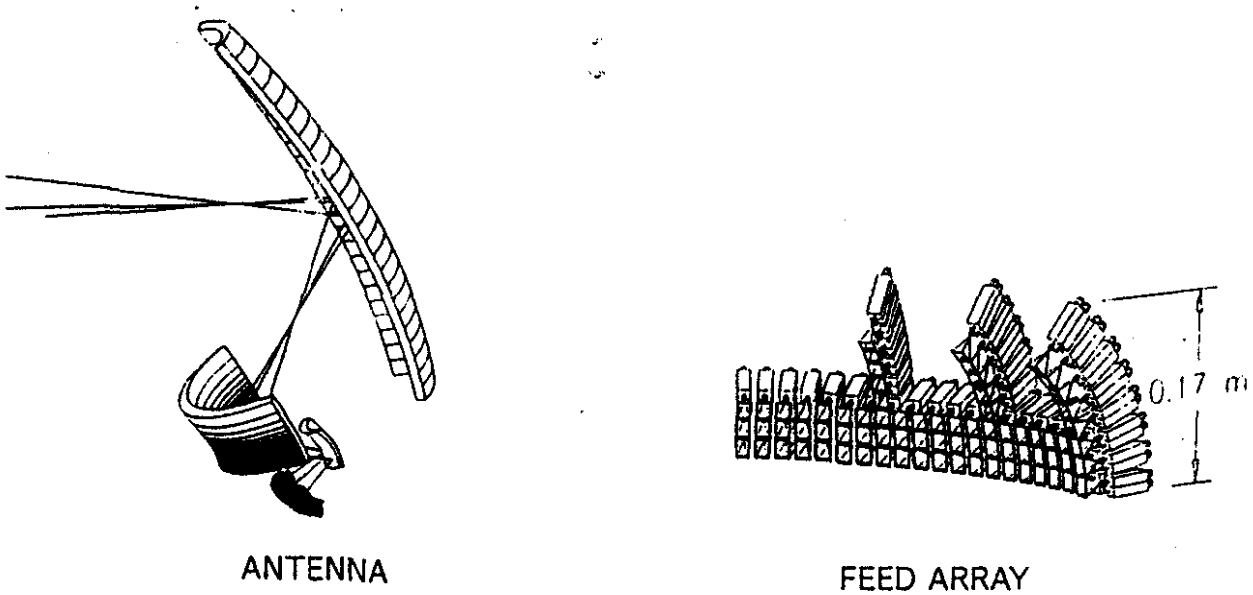

A design concept for the AMLS antenna and feed array. Rays to elements at extreme and middle array positions in the lowest row are shown in the antenna drawing and the feed array is at the bottom. MMIC radiometers are in the rectangular modules behind the horns in the feed array

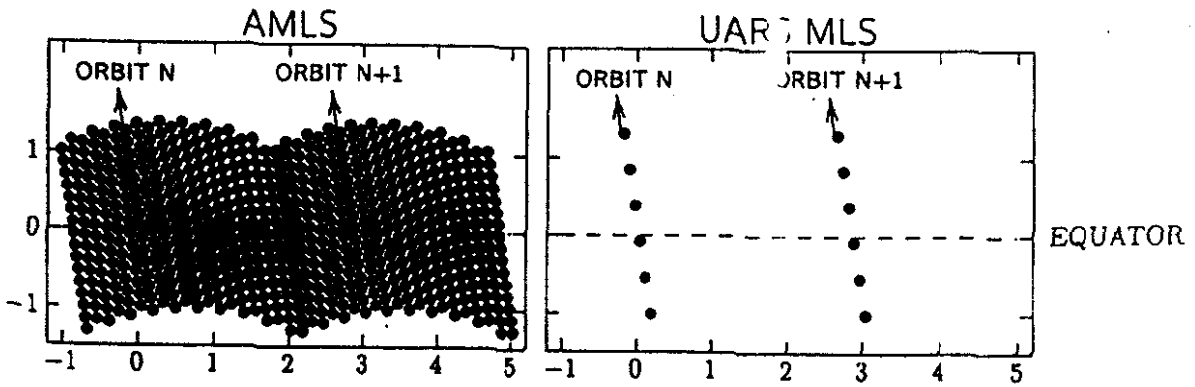

Horizontal sampling of AMLS (with 20 array elements in the horizontal) and of UARS MLS. Each • is a separate measurement, and distances in 1000 km units are indicated along each axis. Smearing about each point, due to radiative transfer along the lin[illegible]th, is Gaussian with half-width about the size of each •. Only a small portion of the orbit near the e[illegible] is shown here; complete global coverage with this sampling is obtained every day.